Spec Sheet

Cisco UCS C220 M6 SFF Rack Server

A printed version of this document is only a copy and not necessarily the latest version. Refer to the following link for the latest released version:

https://www.cisco.com/c/en/us/products/servers-unified-computing/ucs-c-series-rack-servers/datasheet-listing.html



CISCO SYSTEMS
170 WEST TASMAN DR
SAN JOSE, CA, 95134
WWW.CISCO.COM

PUBLICATION HISTORY

REV A.60 JUNE 14, 2024

CONTENTS

OVERVIEW 4
DETAILED VIEWS 6
Detailed Chassis Front View 6
Detailed Chassis Rear Views 8
One Half-Height Riser 9
Three Half-Height Risers 10
Two Full-Height Risers 11
BASE SERVER STANDARD CAPABILITIES and FEATURES 12
CONFIGURING the SERVER 16
STEP 1 VERIFY SERVER SKU 17
STEP 2 SELECT RISERS 18
STEP 3 SELECT CPU(s) 19
STEP 4 SELECT MEMORY 23
Memory Configurations, Features, and Modes 25
STEP 5 SELECT DRIVE CONTROLLERS 30
AHCI with SATA Interposer 30
Cisco 12G SAS RAID Controller 30
Cisco 12G SAS HBA 30
RAID Volumes and Groups 30
STEP 6 SELECT DRIVES 34
Intel® Virtual RAID on CPU (Intel® VROC) 38
STEP 7 SELECT OPTION CARD(s) 39
ORDER OPTIONAL PCIe OPTION CARD ACCESSORIES 42
STEP 8 ORDER GPU CARDS (OPTIONAL) 43
STEP 9 ORDER POWER SUPPLY 44
STEP 10 SELECT INPUT POWER CORD(s) 45
STEP 11 ORDER TOOL-LESS RAIL KIT AND OPTIONAL REVERSIBLE CABLE MANAGEMENT ARM . 49
STEP 12 SELECT MANAGEMENT CONFIGURATION (OPTIONAL) 50
STEP 13 SELECT SERVER BOOT MODE (OPTIONAL) 51
STEP 14 ORDER SECURITY DEVICES (OPTIONAL) 52
STEP 15 SELECT LOCKING SECURITY BEZEL (OPTIONAL) 53
STEP 16 ORDER M.2 SATA SSDs (OPTIONAL) 54
STEP 17 SELECT OPERATING SYSTEM AND VALUE-ADDED SOFTWARE 56
STEP 18 SELECT OPERATING SYSTEM MEDIA KIT 61
SUPPLEMENTAL MATERIAL 62
Chassis 62
Risers 65
Block Diagram 68
Serial Port Details 69
KVM Cable 70
Memory Support for 3rd Generation Intel® Xeon® Scalable Processors (Ice Lake) 71
PMem Support 71
App Direct Mode 71
Memory Mode 71
SPARE PARTS 72
UPGRADING or REPLACING CPUs 88
UPGRADING or REPLACING MEMORY 89
DISCONTINUED EOL PRODUCTS 90

CONTENTS

TECHNICAL SPECIFICATIONS 92
Dimensions and Weight 92
Power Specifications 93
Environmental Specifications 97
Extended Operating Temperature Hardware Configuration Limits 98
Compliance Requirements 99

CONTENTS

OVERVIEW

The UCS C220 M6 SFF server extends the capabilities of Cisco's Unified Computing System portfolio in a 1U form factor with the addition of the 3rd Gen Intel® Xeon® Scalable Processors (Ice Lake), 16 DIMM slots per CPU for 3200-MHz DDR4 DIMMs with DIMM capacity points up to 128 GB. The maximum memory capacity for 2 CPUs is listed here:

- 4 TB: 32 x 128 GB DDR4 DIMMs, or
- 10 TB: 16 x 128 GB DDR4 DIMMs and 16 x 512 GB Intel® Optane™ Persistent Memory Modules (PMem).

There are several front drive and rear riser configurations:

Front Drives

- Up to 10 SAS/SATA/NVMe drives (up to 4 of the drives can be NVMe), or
- Up to 10 NVME drives (all drives are NVMe)

Rear PCIe Risers

- One to three half-height PCIe risers, or
- One to two full-height PCIe risers

The server provides an internal slot for one of the following:

- SATA Interposer to control SATA drives from the PCH (AHCI), or
- Cisco 12G RAID controller with cache backup to control SAS/SATA drives, or
- Cisco 12G SAS pass-through HBA to control SAS/SATA drives



NOTE:
PCIe drives are controlled directly from the CPUs

The UCS C220 M6 server has two LOM ports (10Gbase-T LOM) and a single 1 GbE management port. A modular LAN on motherboard (mLOM) module provides up to two 100 GbE ports. A connector on the front of the chassis provides KVM functionality.

The Cisco UCS C220 M6 server can be used standalone, or as part of the Cisco Unified Computing System, which unifies computing, networking, management, virtualization, and storage access into a single integrated architecture, enabling end-to-end server visibility, management, and control in both bare metal and virtualized environments.

See *Figure 1 on page 5* for front and rear views of the UCS C220 M6 server.

Figure 1 Cisco UCS C220 M6 SFF Rack Server

Front View



Rear View (one half-height riser version)

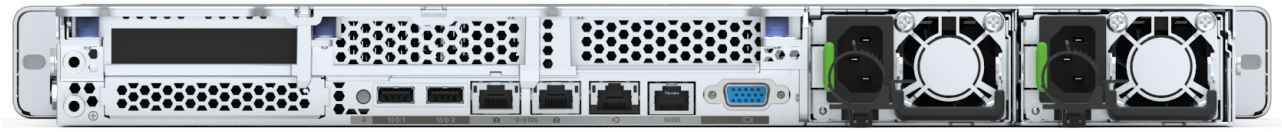

Rear View (three half-height riser version)

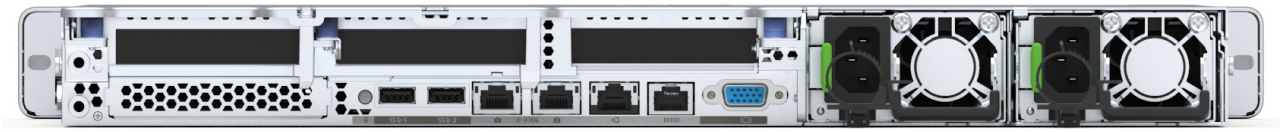

Rear View (two full-height riser version)

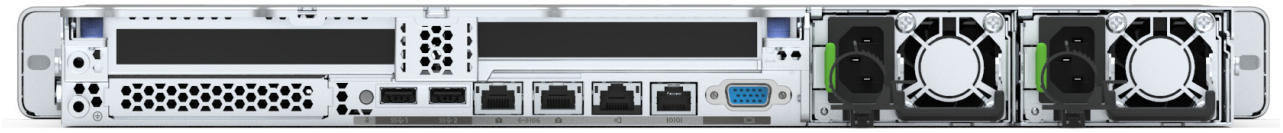

DETAILED VIEWS

Detailed Chassis Front View

Figure 2 shows the detailed front view of the Cisco UCS C220 M6 SFF Rack Server.

Figure 2 Detailed Chassis Front View

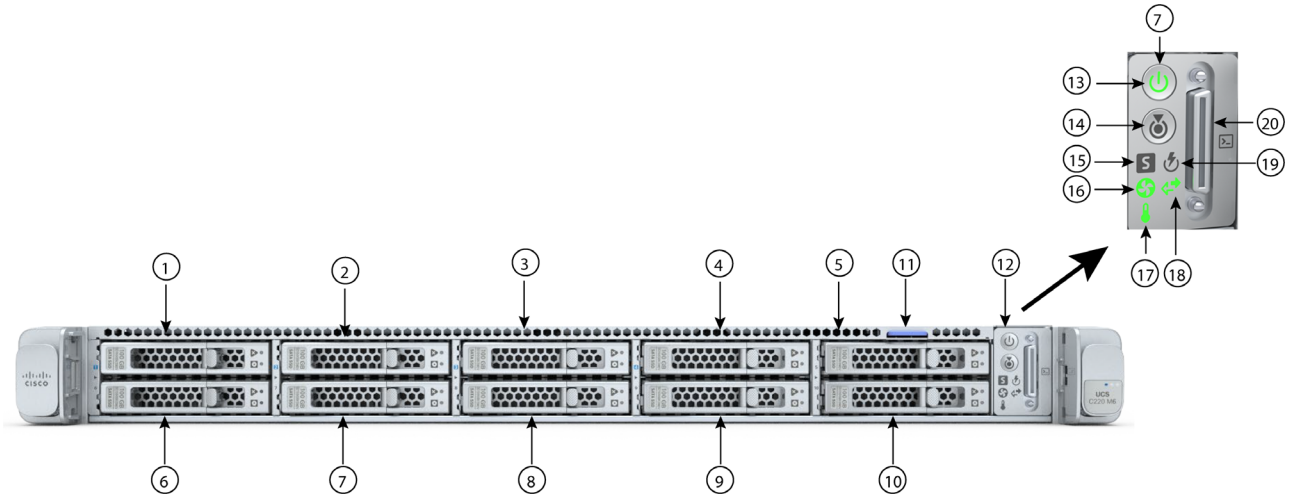

1 - 4	Option 1 ■ Drive bays 1 – 4 support SAS/SATA hard drives and solid state drives (SSDs) or NVME PCIe drives.[1, 2, 3] Option 2 ■ Drive bays 1 – 4 support only NVME PCIe drives	**15**	System status LED
5 - 10	Option 1 ■ Drive bays 5 - 10 support SAS/SATA hard drives and solid state drives (SSDs) only Option 2 ■ Drive bays 5 - 10 support NVME PCIe drives only.	**16**	Fan status LED
11	Asset tag location	**17**	Temperature status LED
12	Control panel	**18**	Network link activity LED
13	Power button/power status LED	**19**	Power supply status LED
14	Unit Identification button/LED	**20**	KVM connector (used with KVM cable that provides two USB 2.0, one VGA, and one serial connector)

Notes:

1. You can mix and match in drive bays 1 - 4. For example, slots 1 and 2 can hold NVMe drives and slots 3 and 4 can hold SAS/SATA HDDs or SSDs.
2. If NVMe drives are selected, you must also select 2 CPUs.
3. If using a SATA Interposer board, up to a maximum of 8 SATA-only drives can be configured (slots 1-4 and 6-9 only)

Detailed Chassis Rear Views

Figure 3 shows the details of the rear panel for the UCS C220 M6 with one rear half-height PCIe riser.

Figure 4 shows the details of the rear panel for the UCS C220 M6 with three rear half-height PCIe risers.

Figure 5 shows the details of the rear panel for the UCS C220 M6 with two rear full-height PCIe risers.

One Half-Height Riser

NOTE: By default, servers come with only one half-height riser 1 installed. 2-CPU servers support all three half-height risers.

Figure 3 Chassis Rear View (one half-height, 3/4 length PCIe riser)

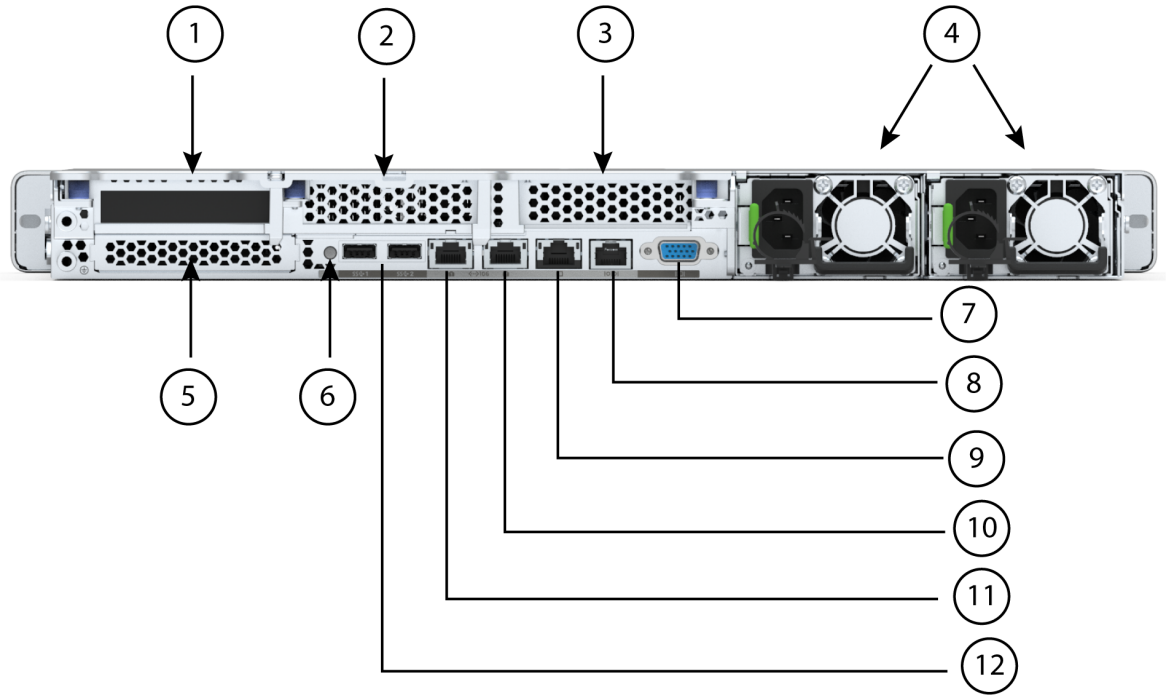

1	Riser 1 (CPU1 control) ■ Supports one PCIe slot ■ Slot 1 is half-height, 3/4 length, x16	**7**	VGA display port (DB15 connector)
2	Riser 2 blanking panel	**8**	COM port (RJ45 connector)
3	Riser 3 blanking panel	**9**	1 GbE dedicated Ethernet management port
4	Power supplies (two, redundant as 1+1)	**10 - 11**	Dual 1/10 GbE Ethernet ports (LAN1, LAN2) LAN1 is left connector, LAN2 is right connector
5	Modular LAN on motherboard (mLOM)	**12**	USB 3.0 ports (two)
6	System ID pushbutton/LED	**-**	

Three Half-Height Risers

NOTE: Only 2-CPU servers support all three half-height risers.

Figure 4 Chassis Rear View (three half-height, 3/4 length PCIe risers)

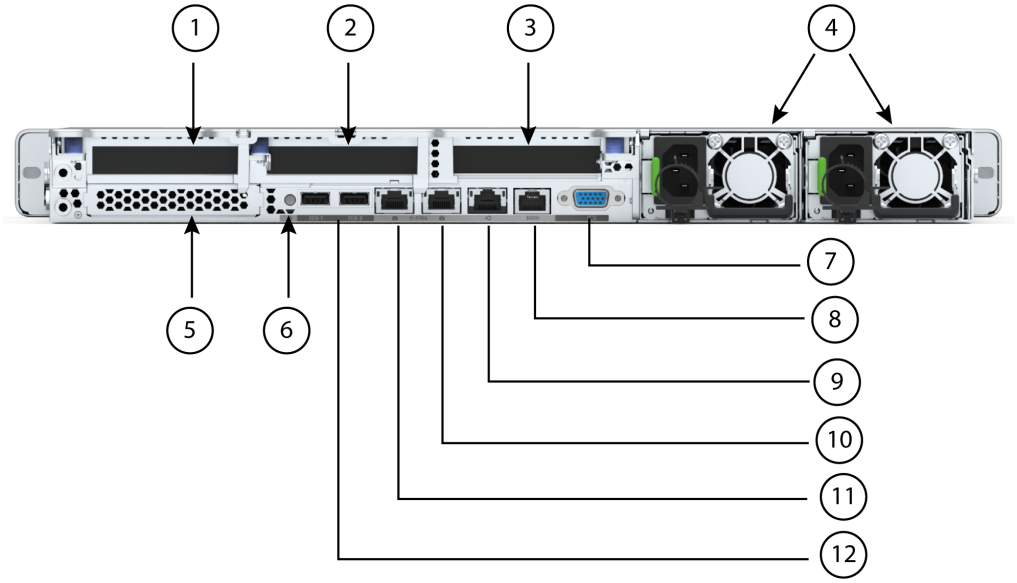

1	Riser 1 (CPU1 control) ■ Supports one PCIe slot (slot 1) ■ Slot 1 is half-height, 3/4 length, x16	**7**	VGA display port (DB15 connector)
2	Riser 2 (CPU1 control) ■ Supports one PCIe slot (slot 2) ■ Slot 2 is half-height, 3/4 length, x16	**8**	COM port (RJ45 connector)
3	Riser 3 (CPU2 control) ■ Supports one PCIe slot (slot 3) ■ Slot 3 is half-height, 3/4 length, x16	**9**	1 GbE dedicated Ethernet management port
4	Power supplies (two, redundant as 1+1)	**10 - 11**	Dual 1/10 GbE Ethernet ports (LAN1, LAN2) LAN1 is left connector, LAN2 is right connector
5	Modular LAN on motherboard (mLOM)	**12**	USB 3.0 ports (two)
6	System ID pushbutton/LED	**-**	

Two Full-Height Risers

NOTE: 1-CPU servers support only full-height riser 1 while 2-CPU servers support both full-height risers.

Figure 5 Chassis Rear View (two full-height, 3/4-length PCIe risers)

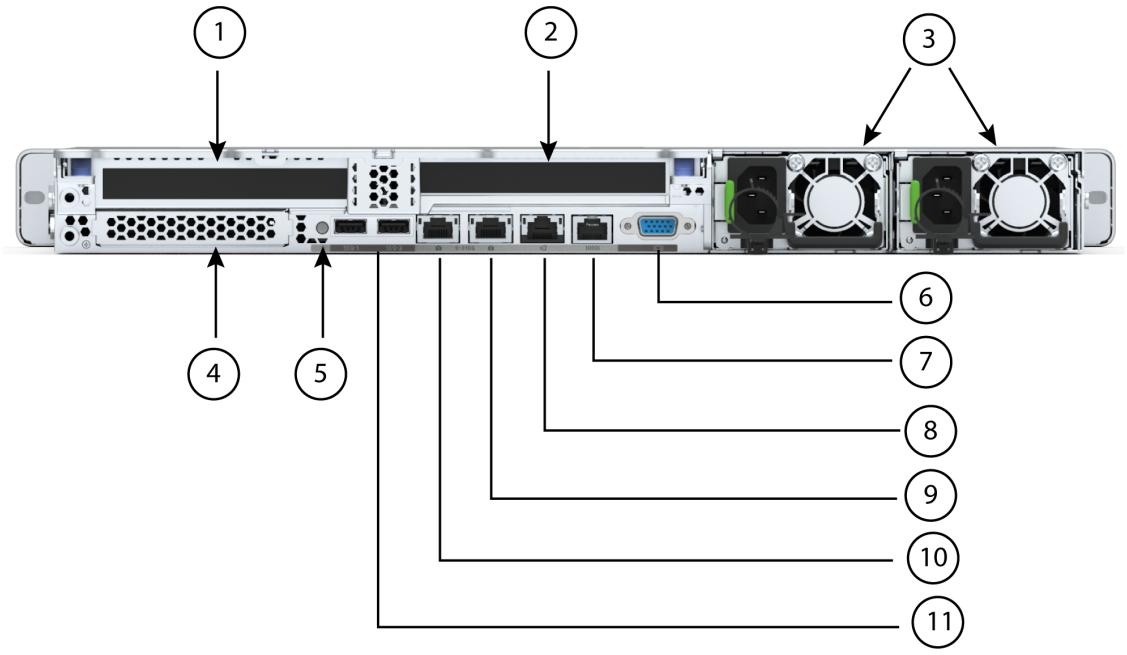

1	Riser 1 (CPU1 control) ■ Plugs into riser 1 motherboard connector ■ Full-height, 3/4 length, x16	**6**	VGA display port (DB15 connector)
2	Riser 2 (CPU2 control) ■ Plugs into riser 3 motherboard connector ■ Full-height, 3/4 length, x16	**7**	COM port (RJ45 connector)
3	Power supplies (two, redundant as 1+1)	**8**	1 GbE dedicated Ethernet management port
4	Modular LAN on motherboard (mLOM)	**9 -10**	Dual 1/10 GbE Ethernet ports (LAN1, LAN2) LAN1 is left connector, LAN2 is right connector
5	System ID pushbutton/LED	**11**	USB 3.0 ports (two)

BASE SERVER STANDARD CAPABILITIES and FEATURES

Table 1 lists the capabilities and features of the base server. Details about how to configure the server for a particular feature or capability (for example, number of processors, disk drives, or amount of memory) are provided in *CONFIGURING the SERVER, page 16*.

Table 1 Capabilities and Features

Capability/Feature	Description
Chassis	One rack unit (1RU) chassis
CPU	One or two 3rd Gen Intel® Xeon® Scalable Processors (Ice Lake)[1]
Chipset	Intel® C621A series chipset
Memory	32 slots for registered DIMMs (RDIMMs) or load-reduced DIMMs (LR DIMMs) and support for Intel® Optane™ Persistent Memory Modules (PMem)
Multi-bit Error Protection	This server supports multi-bit error protection.
Video	The Cisco Integrated Management Controller (CIMC) provides video using the Matrox G200e video/graphics controller: ■ Integrated 2D graphics core with hardware acceleration ■ Embedded DDR memory interface supports up to 512 MB of addressable memory (8 MB is allocated by default to video memory) ■ Supports display resolutions up to 1920 x 1200 16bpp @ 60Hz ■ High-speed integrated 24-bit RAMDAC ■ Single lane PCI-Express host interface running at Gen 1 speed
Power subsystem	Up to two of the following hot-swappable power supplies: ■ 1050 W (AC) ■ 1050 W (DC) ■ 1600 W (AC) ■ 2300 W (AC) One power supply is mandatory; one more can be added for 1 + 1 redundancy.
Front Panel	A front panel controller provides status indications and control buttons
ACPI	This server supports the advanced configuration and power interface (ACPI) 6.2 standard.
Fans	Eight hot-swappable fans for front-to-rear cooling
Infiniband	The InfiniBand architecture is supported by the PCI slots.

Table 1 Capabilities and Features *(continued)*

Capability/Feature	Description
Expansion slots	Three half-height riser slots ■ Riser 1 (controlled by CPU 1): • One x16 PCIe Gen4 Slot, (Cisco VIC), half-height, 3/4 length ■ Riser 2 (controlled by CPU 1): • One x16 PCIe Gen4 Slot, half-height, 3/4 length ■ Riser 3 (controlled by CPU 2): • One x16 PCIe Gen4 Slot, (Cisco VIC), half-height, 3/4 length Two full-height riser slots ■ Riser 1 (controlled by CPU 1): • One x16 PCIe Gen4 Slot, (Cisco VIC), full-height, 3/4 length ■ Riser 2[2] (controlled by CPU 2): • One x16 PCIe Gen4 Slot, (Cisco VIC), full-height, 3/4 length
Interfaces	■ Rear panel • One 1Gbase-T RJ-45 management port • Two 10Gbase-T LOM ports • One RS-232 serial port (RJ45 connector) • One DB15 VGA connector • Two USB 3.0 port connectors • One flexible modular LAN on motherboard (mLOM) slot that can accommodate various interface cards ■ Front panel • One KVM console connector (supplies two USB 2.0 connectors, one VGA DB15 video connector, and one serial port (RS232) RJ45 connector)

Table 1 Capabilities and Features *(continued)*

Capability/Feature	Description
Internal storage devices	Drive storage: Drives are installed into front-panel drive bays, which provide hot-swappable access for SAS/SATA or NVMe drives. The server is orderable in two different versions: ■ UCSC-C220-M6S (option 1): • Up to 10 SFF SAS/SATA hard drives (HDDs) or SAS/SATA solid state drives (SSDs). • Optionally, up to four SFF NVMe PCIe SSDs. These drives must be placed in front drive bays 1, 2, 3, and 4 only, can be mixed with SAS/SATA drives, and are controlled from CPU 2. The rest of the bays (5 - 10) can be populated with SAS/SATA SSDs or HDDs. Two CPUs are required when choosing NVMe SSDs. • If using a SATA Interposer, up to 8 SATA-only drives can be installed (slots 1-4 and 6-9 only). ■ UCSC-C220-M6N (option 2): • Up to 10 SFF NVMe PCIe SSDs only. The drives in slots 1, 2, 3, 4, 6, and 7 are connected to CPU 2 and the drives in slots 5, 8, 9, and 10 are connected to CPU1. One or two CPUs are required when choosing NVMe SSDs. Other storage: ■ A mini-storage module connector on the motherboard supports a boot-optimized RAID controller carrier that holds up to two SATA M.2 SSDs. Mixing different capacity SATA M.2 SSDs is not supported. UCS-M2-HWRAID is required when selecting the M.2 SATA drives. ■ 8GB FlexMMC utility storage for staging of firmware and other user data. 8GB FlexMMC storage is built into the motherboard on M6.
Integrated management processor	Baseboard Management Controller (BMC) running Cisco Integrated Management Controller (CIMC) firmware. Depending on your CIMC settings, the CIMC can be accessed through the 1GE dedicated management port, the 1GE/10GE OCP/mLOM ports, or a Cisco virtual interface card (VIC). CIMC manages certain components within the server, such as the Cisco 12G SAS HBA.

Table 1 Capabilities and Features *(continued)*

Capability/Feature	Description
Storage controllers	The SATA Interposer board, 12G RAID HBA, or 12G SAS HBA. Only one of these at a time can be used. ■ SATA Interposer board • AHCI support of up to eight SATA-only drives (slots 1-8) ■ Cisco 12G RAID controller • RAID support (RAID 0, 1, 5, 6, 10) and RAID0 • Supports up to 10 internal SAS/SATA drives ■ Cisco 12G SAS HBA • No RAID support • JBOD/Pass-through Mode support • Supports up to 10 SAS/SATA internal drives
Modular LAN on Motherboard (mLOM) slot	The dedicated mLOM slot on the motherboard can flexibly accommodate the following cards: ■ Cisco Virtual Interface Cards
UCSM	UCS Manager (UCSM) 4.2(1) or later runs in the Fabric Interconnect and automatically discovers and provisions some of the server components.
CIMC	Cisco Integrated Management Controller 4.2(1) or later

Notes:

1. If NVMe drives are selected, you must also select 2 CPUs.
2. There are three PCIe riser connectors on the motherboard: they are labeled Riser 1, Riser 2, and Riser 3. If the server is configured with three half-height risers, Riser 1 plugs into Riser 1 connector, Riser 2 plugs into Riser 2 connector, and Riser 3 plugs into Riser 3 connector. If the server is configured with two full-height connectors, Riser 1 plugs into Riser 1 connector and Riser 2 plugs into Riser 3 connector. See ***Risers, page 65*** for more details.

CONFIGURING the SERVER

Follow these steps to configure the Cisco UCS C220 M6 SFF Rack Server:

- *STEP 1 VERIFY SERVER SKU, page 17*
- *STEP 2 SELECT RISERS, page 18*
- *STEP 3 SELECT CPU(s), page 19*
- *STEP 4 SELECT MEMORY, page 23*
- *STEP 5 SELECT DRIVE CONTROLLERS, page 30*
- *STEP 6 SELECT DRIVES, page 34*
- *STEP 7 SELECT OPTION CARD(s), page 39*
- *ORDER OPTIONAL PCIe OPTION CARD ACCESSORIES, page 42*
- *STEP 8 ORDER GPU CARDS (OPTIONAL), page 43*
- *STEP 9 ORDER POWER SUPPLY, page 44*
- *STEP 10 SELECT INPUT POWER CORD(s), page 45*
- *STEP 11 ORDER TOOL-LESS RAIL KIT AND OPTIONAL REVERSIBLE CABLE MANAGEMENT ARM, page 49*
- *STEP 12 SELECT MANAGEMENT CONFIGURATION (OPTIONAL), page 50*
- *STEP 13 SELECT SERVER BOOT MODE (OPTIONAL), page 51*
- *STEP 14 ORDER SECURITY DEVICES (OPTIONAL), page 52*
- *STEP 15 SELECT LOCKING SECURITY BEZEL (OPTIONAL), page 53*
- *STEP 16 ORDER M.2 SATA SSDs (OPTIONAL), page 54*
- *STEP 17 SELECT OPERATING SYSTEM AND VALUE-ADDED SOFTWARE, page 56*
- *STEP 18 SELECT OPERATING SYSTEM MEDIA KIT, page 61*
- *SUPPLEMENTAL MATERIAL, page 62*

STEP 1 VERIFY SERVER SKU

Verify the product ID (PID) of the server as shown in *Table 2*.

Table 2 PID of the C220 M6 SFF Rack Base Server

Product ID (PID)	Description
UCS-M6-MLB	UCS M6 Rack, Blade, Chassis MLB This major line bundle (MLB) consists of the Server Node (UCSC-C245-M6SX6) with software PIDs. Use this PID to begin a new configuration.
UCSC-C220-M6S[1]	Up to 10 SFF front drives with no CPU, memory, HDD, PCIe cards, or power supply. All drives can be SAS/SATA HDDS or SSDs or optionally any of bays 1, 2, 3 and 4 can be NVMe PCIe SSDs and the rest can be SAS/SATA HDDs or SSDs.
UCSC-C220-M6N[1]	Up to 10 SFF front drives (NVMe PCIe SSDs only) with no CPU, memory, HDD, PCIe cards, or power supply

Notes:

1. This product may not be purchased outside of the approved bundles (must be ordered under the MLB)

The Cisco UCS C220 M6 SFF servers do not include power supplies, CPUs, DIMM memory, Intel® Optane™ Persistent Memory (PMem), hard disk drives (HDDs), solid-state drives (SSDs), NVMe drives, riser 1, riser 2, riser 3, tool-less rail kit, or option cards.



NOTE: Use the steps on the following pages to configure the server with the components that you want to include.

STEP 2 SELECT RISERS

The riser PIDs are listed in *Table 3*. Full-height risers cannot be mixed with half-height risers.

Table 3 PIDs of the Risers and Riser Blanks

Product ID (PID)	Description
Included by default (no PID)	Half-height riser 1 (controlled by CPU 1) ■ One x16 PCIe Gen4 riser, standard PCIe, supports Cisco VIC, half-height, 3/4 length
UCSC-RIS2H-220M6	Half-height riser 2 (controlled by CPU 1) ■ One x16 PCIe Gen4 riser, standard PCIe, half-height, 3/4 length
UCSC-RIS3H-220M6	Half-height riser 3 (controlled by CPU 2) ■ One x16 PCIe Gen4 riser, standard PCIe, supports Cisco VIC, half-height, 3/4 length
UCSC-GPURKIT-C220[1]	Kit containing a GPU mounting bracket and the following risers (risers 1 and 2): ■ Riser 1: One x16 PCIe Gen4 riser, supports Cisco VIC, full-height, 3/4 length ■ Riser 2: One x16 PCIe Gen4 riser, supports Cisco VIC, full-height, 3/4 length
UCSC-FBRS-C220M6	Riser 3 blank panel

Notes:

1. Can be selected with quantity 1 or 2 CPUs. It is recommended that the user purchase 2 QTY of Processor to support Riser2 FH x16 Slot. Full-height Riser 1 is controlled from CPU1 and Riser 2 is controlled from CPU2.

- The System defaults to automatically include the one half-height riser shown in the *Table 3*. (factory installed)
- If you select 1 CPU configuration, the system includes two half-height risers (riser 1 and riser 2) and a blank panel for the riser 3
- If you select 2 CPU configuration, the system includes all the three half-height risers (riser 1 and riser 2, 3).
- If you order PID UCSC-GPURKIT-C220, the system includes two full-height risers (riser 1 and riser 2)

Approved Configurations

(1) Half-height riser 1 only (controlled from CPU1). This is the default and is automatically included.

(2) Half-height risers 1 and 2 only. Risers 1 and 2 are controlled from CPU1

(3) Half-height risers 1, 2, and 3 only. Risers 1 and 2 are controlled from CPU1 and Riser 3 is controlled from CPU2

(4) Full-height risers 1 and 2 only. Riser 1 is controlled from CPU1 and riser 2 is controlled from CPU2.

STEP 3 SELECT CPU(s)

The standard CPU features are:

- 3rd Gen Intel® Xeon® Scalable Processors (Ice Lake)
- Intel® C621A series chipset
- Cache size of up to 60 MB
- Up to 40 cores

Select CPUs

The available CPUs are listed in *Table 4*. See *Table 5 on page 21* for CPU suffix notations.

Table 4 Available CPUs

Product ID (PID)	Clock Freq (GHz)	Power (W)	Cache Size (MB)	Cores	UPI[1] Links (GT/s)	Highest DDR4 DIMM Clock Support (MHz)[2]	PMem Support
8000 Series Processors							
UCS-CPU-I8380	2.3	270	60	40	3 at 11.2	3200	Yes
UCS-CPU-I8368	2.4	270	57	38	3 at 11.2	3200	Yes
UCS-CPU-I8362	2.8	265	48	32	3 at 11.2	3200	Yes
UCS-CPU-I8360Y	2.4	250	54	36	3 at 11.2	3200	Yes
UCS-CPU-I8358P	2.6	240	48	32	3 at 11.2	3200	Yes
UCS-CPU-I8358	2.6	250	48	32	3 at 11.2	3200	Yes
UCS-CPU-I8352M	2.3	185	48	32	3 at 11.2	3200	Yes
UCS-CPU-I8352Y	2.2	205	48	32	3 at 11.2	3200	Yes
UCS-CPU-I8352V	2.1	195	54	36	3 at 11.2	2933	Yes
UCS-CPU-I8352S	2.2	205	48	32	3 at 11.2	3200	Yes
UCS-CPU-I8351N[3]	2.4	225	54	36	0	2933	Yes
6000 Series Processors							
UCS-CPU-I6354	3.0	205	39	18	3 at 11.2	3200	Yes
UCS-CPU-I6348	2.6	235	42	28	3 at 11.2	3200	Yes
UCS-CPU-I6346	3.1	205	36	16	3 at 11.2	3200	Yes
UCS-CPU-I6342	2.8	230	36	24	3 at 11.2	3200	Yes
UCS-CPU-I6338N	2.2	185	48	32	3 at 11.2	2666	Yes
UCS-CPU-I6338T	2.1	165	36	24	3 at 11.2	3200	Yes
UCS-CPU-I6338	2.0	205	48	32	3 at 11.2	3200	Yes
UCS-CPU-I6336Y	2.4	185	36	24	3 at 11.2	3200	Yes
UCS-CPU-I6334	3.6	165	18	8	3 at 11.2	3200	Yes
UCS-CPU-I6330N	2.2	165	42	28	3 at 11.2	2666	Yes
UCS-CPU-I6330	2.0	205	42	28	3 at 11.2	2933	Yes

Table 4 Available CPUs

Product ID (PID)	Clock Freq (GHz)	Power (W)	Cache Size (MB)	Cores	UPI[1] Links (GT/s)	Highest DDR4 DIMM Clock Support (MHz)[2]	PMem Support
UCS-CPU-I6326	2.9	185	24	16	3 at 11.2	3200	Yes
UCS-CPU-I6314U[4]	2.3	205	48	32	0	3200	Yes
UCS-CPU-I6312U[5]	2.4	185	36	24	0	3200	Yes
5000 Series Processors							
UCS-CPU-I5320T	2.3	150	30	20	3 at 11.2	2933	Yes
UCS-CPU-I5320	2.2	185	39	26	3 at 11.2	2933	Yes
UCS-CPU-I5318N	2.1	150	36	24	3 at 11.2	2666	Yes
UCS-CPU-I5318S	2.1	165	36	24	3 at 11.2	2933	Yes
UCS-CPU-I5318Y	2.1	165	36	24	3 at 11.2	2933	Yes
UCS-CPU-I5317	3.0	150	18	12	3 at 11.2	2933	Yes
UCS-CPU-I5315Y	3.2	140	12	8	3 at 11.2	2933	Yes
4000 Series Processors							
UCS-CPU-I4316	2.3	150	30	20	2 at 10.4	2666	No
UCS-CPU-I4314	2.4	135	24	16	2 at 10.4	2666	Yes
UCS-CPU-I4310T	2.3	105	15	10	2 at 10.4	2666	No
UCS-CPU-I4310	2.1	120	18	12	2 at 10.4	2666	No
UCS-CPU-I4309Y	2.8	105	12	8	2 at 10.4	2666	No

Notes:

1. UPI = Ultra Path Interconnect.
2. If higher or lower speed DIMMs are selected than what is shown in *Table 6 on page 24* for a given CPU speed, the DIMMs will be clocked at the lowest common denominator of CPU clock and DIMM clock.
3. The maximum number of UCS-CPU-I8351N CPUs is one
4. The maximum number of UCS-CPU-I6314U CPUs is one
5. The maximum number of UCS-CPU-I6312U CPUs is one

Table 5 CPU Suffixes

CPU Suffix	Description	Features
N	Networking Optimized	Optimized for use in networking applications like L3 forwarding, 5G UPF, OVS DPDK, VPP FIB router, VPP IPsec, web server/NGINX, vEPC, vBNG, and vCMTS. SKUs have higher base frequency with lower TDPs to enable best performance/Watt
P	Cloud Optimized	SKU specifically designed for cloud IaaS environments to deliver higher frequencies at constrained TDPs
V	Cloud Optimized	SKUs specifically designed for cloud environments to deliver high rack density and maximize VM/cores per TCO$
T	High T case	SKUs designed for Network Environment-Building System (NEBS) environments
U	1-socket Optimized	Optimized for targeted platforms adequately served by the cores, memory bandwidth and IO capacity available from a single processor
S	Max SGX enclave size	Supports Max SGX enclave size (512GB) to enhance and protect the most sensitive portions of a workload or service
M	Media and AI optimized	Media, AI and HPC Segment Optimized for lower TDP & higher frequencies delivering better perf/w
Y	Speed Select – Performance Profile	Intel® Speed Select Technology provides the ability to set a guaranteed base frequency for a specific number of cores, and assign this performance profile to a specific application/workload to guarantee performance requirements. It also provides the ability to configure settings during runtime and provide additional frequency profile configuration opportunities.



CAUTION: For systems configured with 3rd Gen Intel® Xeon® Scalable Processors (Ice Lake) processors operating above 28° C [82.4° F], a fan fault or executing workloads with extensive use of heavy instructions sets such as Intel® Advanced Vector Extensions 512 (Intel® AVX-512), may assert thermal and/or performance faults with an associated event recorded in the System Event Log (SEL).

Approved Configurations

(1) DIMM only configurations:

- Select one or two identical CPUs listed in *Table 4 on page 19*

(2) DIMM/PMem Mixed Configurations:

- You must select two identical CPUs listed in *Table 4 on page 19*

(3) For the UCSC-C220-M6S:

- For 1-CPU systems, the server is shipped by default with riser 1 only
- For 2-CPU systems, the server is shipped:
  - With half-height risers 1, 2, and 3 by default, or
  - With full-height risers 1 and 2 if you order a non-T4 GPU with more than 75 W power dissipation

(4) For the UCSC-C220-M6N:

- Select one or two identical CPUs listed in *Table 4 on page 19*



NOTE:

- You cannot have two I8351N or two I6314U or I6312U CPUs in a two-CPU configuration.
- If you configure a server with one I8351N CPU or one I6314U CPU or one I6312U CPU you cannot later upgrade to a 2-CPU system with two of these CPUs.
- With using single CPU, up to four NVMe drives are allowed.

Caveats

- The selection of 1 or 2 CPUs depends on the desired server functionality. See the following sections:
  - *STEP 4 SELECT MEMORY, page 23*
  - *STEP 5 SELECT DRIVE CONTROLLERS, page 30*
  - *STEP 6 SELECT DRIVES, page 34*
  - *STEP 7 SELECT OPTION CARD(s), page 39*

STEP 4 SELECT MEMORY

The available memory main characteristics for the C220 M6 SFF are as follows:

- Clock speed: 3200, 2933, or 2666 MHz depending on CPU speed
- Ranks per DIMM: 1, 2, 4, or 8
- Operational voltage: 1.2 V
- Registered ECC DDR4 DIMMS (RDIMMs), Load-reduced DIMMs (LRDIMMs), or Intel® Optane™ Persistent Memory Modules (PMem).

Memory is organized with eight memory channels per CPU, with up to two DIMMs per channel, as shown in ***Figure 6***.

Figure 6 C220 M6 SFF Memory Organization

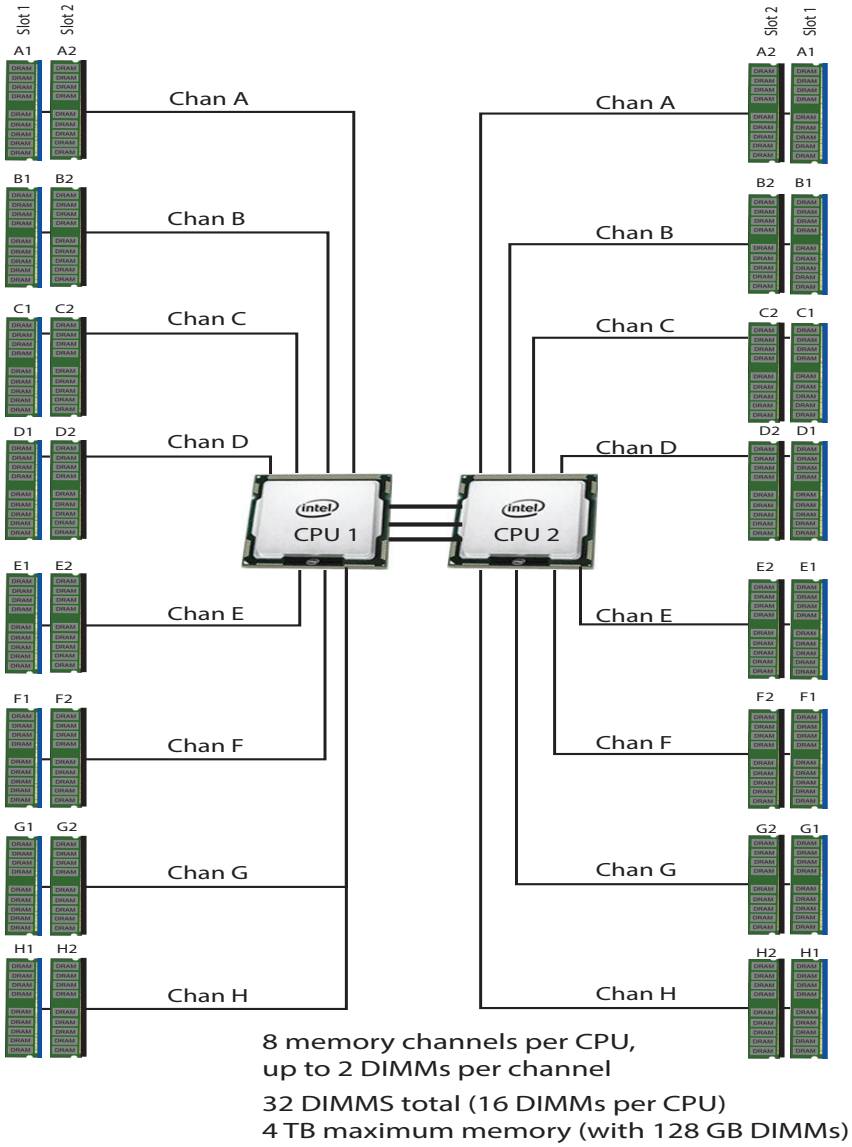

DIMMs and Memory Mirroring

Select the memory configuration and whether or not you want the memory mirroring option. The supported memory DIMMs, DCPMMs, DCPMM Memory Mode, and the mirroring option are listed in *Table 6*.

NOTE: When memory mirroring is enabled, the memory subsystem simultaneously writes identical data to two channels. If a memory read from one of the channels returns incorrect data due to an uncorrectable memory error, the system automatically retrieves the data from the other channel. A transient or soft error in one channel does not affect the mirrored data, and operation continues unless there is a simultaneous error in exactly the same location on a DIMM and its mirrored DIMM. Memory mirroring reduces the amount of memory available to the operating system by 50% because only one of the two populated channels provides data.

Table 6 Available DDR4 DIMMs and PMem

Product ID (PID)	PID Description	Voltage	Ranks /DIMM
3200-MHz DIMMs			
UCS-MR-X16G1RW	16 GB RDIMM SRx4 3200 (8Gb)	1.2 V	1
UCS-MR-X32G1RW	32 GB RDIMM SRx4 3200 (16Gb)	1.2 V	1
UCS-MR-X32G2RW	32 GB RDIMM DRx4 3200 (8Gb)	1.2 V	2
UCS-MR-X64G2RW	64 GB RDIMM DRx4 3200 (16Gb)	1.2 V	2
UCS-ML-128G4RW	128 GB LRDIMM QRx4 3200 (16Gb) (non-3DS)	1.2 V	4
Intel® Optane™ Persistent Memory (PMem)[1]			
UCS-MP-128GS-B0	Intel® Optane™ Persistent Memory, 128GB, 3200 MHz		
UCS-MP-256GS-B0	Intel® Optane™ Persistent Memory, 256 GB, 3200 MHz		
UCS-MP-512GS-B0	Intel® Optane™ Persistent Memory, 512 GB, 3200 MHz		
DIMM Blank[2]			
UCS-DIMM-BLK	UCS DIMM Blank		
Intel® Optane™ Persistent Memory (PMem) Operational Modes			
UCS-DCPMM-AD	App Direct Mode		
UCS-DCPMM-MM	Memory Mode		
Memory Mirroring Option			
N01-MMIRROR[3]	Memory mirroring option		

Notes:

1. All 3rd Generation Intel® Xeon® Scalable Processors (Ice Lake) support PMem products, except 4309Y, 4310, 4310T, and 4316 processor.
2. Any empty DIM M slot must be populated with a DIMM blank to maintain proper cooling airflow.
3. For more memory configuration details, please refer to and *UPGRADING or REPLACING CPUs, page 88*.

Memory Configurations, Features, and Modes

System speed is dependent on the CPU DIMM speed support. Refer to *Available CPUs, page 19* for DIMM speeds.

- The server supports the following memory reliability, availability, and serviceability (RAS) BIOS options (only one option can be chosen):
  - Adaptive Double Device Data Correction (ADDDC) (default)
  - Maximum performance
  - Full mirroring
  - Partial mirroring
- For best performance, observe the following:
  - When one DIMM is used, it must be populated in DIMM slot 1 (farthest away from the CPU) of a given channel.
  - When single- or dual-rank DIMMs are populated in two DIMMs per channel (2DPC) configurations, always populate the higher number rank DIMM first (starting from the farthest slot). For a 2DPC example, first populate with dual-rank DIMMs in DIMM slot 1. Then populate single-rank DIMMs in DIMM 2 slot.
- DIMMs for CPU 1 and CPU 2 (when populated) must always be configured identically.
- Cisco memory from previous generation servers (DDR3 and DDR4) is not compatible with the server.
- Memory can be configured in any number of DIMMs as pairs, although for optimal performance, see the following document

Cisco UCS C220/C240/B200 M6 Memory Guide

- For additional information, refer to *Memory Support for 3rd Generation Intel® Xeon® Scalable Processors (Ice Lake), page 71*.
- For detailed Intel® Optane™ Persistent Memory (PMem) configurations, refer to the following document

https://www.cisco.com/content/en/us/td/docs/unified_computing/ucs/c/hw/c220m6/install/c220m6.html

Approved Configurations

(1) 1-CPU configuration without memory mirroring:

- Select from 1 to 16 DIMMs.
  - 1, 2, 4, 6, 8, 12, or 16 DIMMs allowed
  - 3, 5, 7, 9, 10, 11, 13, 14, 15 DIMMs not allowed
  - DIMMs for both CPUs must be configured identically.

The DIMMs will be placed by the factory as shown in the following tables.

#DIMMs	CPU 1 DIMM Placement in Channels (for identically ranked DIMMs)
1	(A1)
2	(A1, E1)
4	(A1, C1); (E1, G1)
6	(A1, C1); (D1, E1); (G1, H1)
8	(A1, C1); (D1, E1); (G1, H1); (B1, F1)
12	(A1, C1); (D1, E1); (G1, H1); (A2, C2); (D2, E2); (G2, H2)
16	(A1, B1); (C1, D1); (E1, F1); (G1, H1); (A2, B2); (C2, D2); (E2, F2); (G2, H2)

(2) 1-CPU configuration with memory mirroring:

- Select 8 or 16 DIMMs per CPU (DIMMs for all CPUs must be configured identically). In addition, the memory mirroring option (N01-MMIRROR) as shown in *Table 6 on page 24* must be selected.

The DIMMs will be placed by the factory as shown in the following tables.

# DIMMs Per CPU	CPU 1 DIMM Placement in Channels (for identical ranked DIMMs)
8	(A1, C1); (D1, E1); (G1, H1); (B1, F1)
16	(A1, B1); (C1, D1); (E1, F1); (G1, H1); (A2, B2); (C2, D2); (E2, F2); (G2, H2)

- Select the memory mirroring option (N01-MMIRROR) as shown in *Table 6 on page 24*.

(3) 2-CPU configuration without memory mirroring:

- Select from 1 to 16 DIMMs per CPU.
  - 1, 2, 4, 6, 8, 12, or 16 DIMMs allowed
  - 3, 5, 7, 9, 10, 11, 13, 14, 15 DIMMs not allowed
  - DIMMs for both CPUs must be configured identically.

The DIMMs will be placed by the factory as shown in the following tables.

#DIMMs	CPU 1 DIMM Placement in Channels (for identically ranked DIMMs)	CPU 2 DIMM Placement in Channels (for identically ranked DIMMs)
1	(A1)	(A1)
2	(A1, E1)	(A1, E1)
4	(A1, C1); (E1, G1)	(A1, C1); (E1, G1)
6	(A1, C1); (D1, E1); (G1, H1)	(A1, C1); (D1, E1); (G1, H1)
8	(A1, C1); (D1, E1); (G1, H1); (B1, F1)	(A1, C1); (D1, E1); (G1, H1); (B1, F1)
12	(A1, C1); (D1, E1); (G1, H1); (A2, C2); (D2, E2); (G2, H2)	(A1, C1); (D1, E1); (G1, H1); (A2, C2); (D2, E2); (G2, H2)
16	(A1, B1); (C1, D1); (E1, F1); (G1, H1); (A2, B2); (C2, D2); (E2, F2); (G2, H2)	(A1, B1); (C1, D1); (E1, F1); (G1, H1); (A2, B2); (C2, D2); (E2, F2); (G2, H2)

(4) 2-CPU configuration with memory mirroring:

- Select 8 or 16 DIMMs per CPU (DIMMs for all CPUs must be configured identically). In addition, the memory mirroring option (N01-MMIRROR) as shown in *Table 6 on page 24* must be selected.

The DIMMs will be placed by the factory as shown in the following tables.

# DIMMs Per CPU	CPU 1 DIMM Placement in Channels (for identical ranked DIMMs)	CPU 2 DIMM Placement in Channels (for identically ranked DIMMs)
8	(A1, C1); (D1, E1); (G1, H1); (B1, F1)	(A1, C1); (D1, E1); (G1, H1); (B1, F1)
16	(A1, B1); (C1, D1); (E1, F1); (G1, H1); (A2, B2); (C2, D2); (E2, F2); (G2, H2)	(A1, B1); (C1, D1); (E1, F1); (G1, H1); (A2, B2); (C2, D2); (E2, F2); (G2, H2)

- Select the memory mirroring option (N01-MMIRROR) as shown in *Table 6 on page 24*.



NOTE: System performance is optimized when the DIMM type and quantity are equal for both CPUs, and when all channels are filled equally across the CPUs in the server.

Table 7 3200-MHz DIMM Memory Speeds with Different Intel® Xeon® Ice Lake® Processors

DIMM and CPU Frequencies (MHz)	DPC	LRDIMM (4Rx4)- 128 GB (MHz)	RDIMM (2Rx4) - 64 GB (MHz)	RDIMM (2Rx4) - 32 GB (MHz)	RDIMM (1Rx4) - 16 GB (MHz)
		1.2 V	1.2 V	1.2 V	1.2 V
DIMM = 3200 CPU = 3200	1DPC	3200	3200	3200	3200
	2DPC	3200	3200	3200	3200
DIMM = 3200 CPU = 2933	1DPC	2933	2933	2933	2933
	2DPC	2933	2933	2933	2933
DIMM = 3200 CPU = 2666	1DPC	2666	2666	2666	2666
	2DPC	2666	2666	2666	2666

DIMM Rules

- Allowed DIMM count for 1 CPU:
  - Minimum DIMM count = 1; Maximum DIMM count = 16
  - 1, 2, 4, 6, 8, 12, or 16 DIMMs allowed
  - 3, 5, 7. 9, 10, 11, 13, 14, or 15 DIMMs not allowed.
- Allowed DIMM count for 2 CPUs
  - Minimum DIMM count = 2; Maximum DIMM count = 32
  - 2, 4, 8, 12, 16, 24, or 32 DIMMs allowed
  - 6, 10, 14, 18, 20, 22, 26, 28, or 30 DIMMs not allowed.
- DIMM Mixing:
  - Mixing different types of DIMM (RDIMM with LRDIMM) is not supported within a server.
  - Mixing RDIMM with RDIMM types is allowed if they are mixed in same quantities, in a balanced configuration.
  - Mixing 16GB, 32GB, and 64GB RDIMMs is supported.
  - 128GB LRDIMMs cannot be mixed with other RDIMMs.



NOTE:

- DIMM mixing is not allowed when PMem are installed; in these cases, all DIMMs must be the same type and size.
- See the detailed mixing DIMM configurations at the following link

Cisco UCS C220/C240/B200 M6 Memory Guide

See *Table 8* for Intel® Optane™ Persistent Memory modes. See *Table 8* for allowed DIMM/PMem mixed configurations.

Table 8 Intel® Optane™ Persistent Memory Modes

Intel® Optane® DC Persistent Memory Modes	
App Direct Mode:	PMem operates as a solid-state disk storage device. Data is saved and is non-volatile. Both PMem and DIMM capacities count towards the CPU capacity limit
Memory Mode:	PMem operates as a 100% memory module. Data is volatile and DRAM acts as a cache for PMem. Only the PMem capacity counts towards the CPU capacity limit). This is the factory default mode.

Table 9 Intel® Whitley® Xeon® Processor Allowable Mixed DIMM/PMem[1] Physical Configuration

DIMM + PMem Count	CPU 1 or CPU 2															
	ICX: IMC2				ICX: IMC3				ICX: IMC1				ICX: IMC0			
	Chan 0 (F)		Chan 1 (E)		Chan 0 (H		Chan 1 (G)		Chan 0 (C)		Chan 1 (D)		Chan 0 (A)		Chan 1 (B)	
	Slot 1	Slot 2	Slot 1	Slot 2	Slot 1	Slot 2	Slot 1	Slot 2	Slot 2	Slot 1	Slot 2	Slot 1	Slot 2	Slot 1	Slot 2	Slot 1
4 + 4[2]	PMem		DIMM		PMem		DIMM			DIMM		PMem		DIMM		PMem
8 + 1[3]	DIMM		DIMM		DIMM		DIMM			DIMM		DIMM	PMem	DIMM		DIMM
8 + 4[4]	DIMM		DIMM	PMem	DIMM		DIMM	PMem	PMem	DIMM		DIMM	PMem	DIMM		DIMM
8 + 8[5]	DIMM	PMem	DIMM	PMem	DIMM	PMem	DIMM	PMem	PMem	DIMM	PMem	DIMM	PMem	DIMM	PMem	DIMM
NOTE: AD = App Direct Mode, MM = Memory Mode																

Notes:

1. All systems must be fully populated with two CPUs when using PMem at this time.
2. AD, MM
3. AD
4. AD, MM
5. AD, MM

For detailed Intel PMem configurations, refer to the following documents:

https://www.cisco.com/content/en/us/td/docs/unified_computing/ucs/c/hw/c220m6/install/c220m6.html

Cisco UCS C220/C240/B200 M6 Memory Guide

STEP 5 SELECT DRIVE CONTROLLERS

The following list summarizes how drives are controlled on the server:

- Servers with SATA drives (only) are controlled by an Intel C621 PCH through the SATA Interposer (AHCI), or
- SAS/SATA drives are controlled through a Cisco 12G RAID Controller, or
- SAS/SATA drives are controlled through a Cisco 12G SAS pass-through HBA
- PCIe drives are controlled directly from the CPUs

AHCI with SATA Interposer

The default configuration is Advanced Host Control Interface (AHCI), which supports SATA-only drives. A maximum of 8 SATA drives are supported with AHCI and this configuration requires a SATA interposer board, which plugs directly into the drive backplane. The SATA Interposer supports drives in slots 1-8.



NOTE: AHCI is limited to Windows and Linux operating systems only. There is no VMware support for AHCI.

Cisco 12G SAS RAID Controller

This RAID controller supports up to 10 SAS or SATA drives operating at 3 Gbs, 6 Gbs, and 12 Gbs. It includes a SuperCap and a 4 GB flash-back write cache (FBWC) and supports RAID 0, 1, 5, 6, 10, 50, 60, JBOD mode, and SRAID0. The RAID controller plugs directly into a dedicated slot.



NOTE: 64 RAID groups (virtual drives) are supported with this RAID controller.i

Cisco 12G SAS HBA

This HBA supports up to 10 SAS or SATA drives operating at 3 Gbs, 6 Gbs, and 12 Gbs. It supports JBOD or pass-through mode (not RAID) and plugs directly into a dedicated slot.

RAID Volumes and Groups

When creating each RAID volume, follow these guidelines:

- Use the same capacity for each drive in each RAID volume
- For the Cisco 12G SAS RAID controller, use either all SAS HDDs, or all SAS SSDs, or all SATA SSDs in each RAID volume

Select RAID Controller Options

If you do not want the default AHCI 8 SATA-only drive setup (8 internal drives in drive bays 1-8 and 2 SATA M.2 drives), select one of the following:

- One Cisco 12G RAID controller (see ***Table 10***), or
- One Cisco 12G SAS HBA (see ***Table 10***)



NOTE:

- The default solution is AHCI, which supports a limited number of drives, operating systems, and virtualized environments. For a more comprehensive solution, choose a controller from ***Table 10***.
- UCS-M2-HWRAID is required when selecting the M.2 SATA drives.
- vSAN HCL listed/qualified component is UCSC-SAS-M6T (UCSC-SAS-220M6).

Table 10 Hardware Controller Options

Product ID (PID)	PID Description
Controllers for Internal Drives **Note that if the following Cisco 12G SAS RAID controller or Cisco 12G SAS HBA is selected, it is factory-installed in a dedicated slot.**	
UCSC-RAID-220M6	Cisco 12G SAS RAID controller with SuperCap and 4 GB FBWC ■ Supports up to 10 internal SAS HDDs and SAS/SATA SSDs. ■ Supports RAID 0, 1, 5, 6, 10, 50, 60, and JBOD mode. Supports mixed RAID and JBOD mode. ■ For all self-encrypting drives (SED), standalone Management (CIMC/UCSM) is supported for configuring and managing local keys. For now, SED drives are managed with local key management only. Third-party key management will be supported (KMIP compliant).
UCSC-SAS-220M6	Cisco 12G SAS HBA ■ No RAID support ■ Supports up to 10 internal SAS HDDs and SAS/SATA SSDs ■ Supports JBOD or pass-through mode
SATA Interposer	
UCSC-SATAIN-220M6	SATA Interposer (for control of up to 8 SATA-only drives using AHCI)
Supercap	
UCS-SCAP-M6	M6 Supercap for write cache backup
RAID Configuration Options (not available for Cisco 12G SAS HBA or AHCI)	
R2XX-SRAID0	Enable single disk RAID 0 Setting.
R2XX-RAID0	Factory preconfigured RAID striping option Enable RAID 0 Setting. Requires two or more hard drive.s
R2XX-RAID1	Factory preconfigured RAID mirroring option Enable RAID 1 Setting. Requires two or more drives with the same size, speed, capacity.
R2XX-RAID5	Factory preconfigured RAID option Enable RAID 5 Setting. Requires a minimum of three drives of the same size, speed, capacity.
R2XX-RAID6	Factory preconfigured RAID option Enable RAID 6 Setting. Requires a minimum of four drives of the same size, speed, capacity.
R2XX-RAID10	Factory preconfigured RAID option Enable RAID 10 Setting. Requires a even number of drives (minimum of four drives) of the same size, speed, capacity.

Approved Configurations

- AHCI supports up to 8 internal SATA HDDs (slots 1-8) with no RAID support.
- The Cisco 12G RAID SAS controller supports up to 10 internal SAS/SATA SSDs or HDDs with up to RAID 0, 1, 10, 5, 6, 50, 60 and JBOD mode support.
- The Cisco 12G SAS HBA supports up to 10 internal drives with JBOD support.

STEP 6 SELECT DRIVES

The standard disk drive features are:

- 2.5-inch small form factor
- Hot-pluggable
- Drives come mounted in sleds

Select Drives

The available drives are listed in *Table 11*.

Table 11 Available Hot-Pluggable Sled-Mounted Drives
UCSC-C220-M6S (10-drive system) and UCSC-C220-M6N (10-drive NVMe only system)

Product ID (PID)	PID Description	Drive Type	Capacity
HDDs			
HDDs (15K RPM)			
UCS-HD900G15K12N	900 GB 12G SAS 15K RPM SFF HDD	SAS	900 GB
UCS-HD300G15K12N	300 GB 12G SAS 15K RPM SFF HDD	SAS	300 GB
UCS-HD600G15K12N	600 GB 12G SAS 15K RPM SFF HDD	SAS	600 GB
HDDs (10K RPM)			
UCS-HD300G10K12N	300 GB 12G SAS 10K RPM SFF HDD	SAS	300 GB
UCS-HD600G10K12N	600 GB 12G SAS 10K RPM SFF HDD	SAS	600 GB
UCS-HD12TB10K12N	1.2 TB 12G SAS 10K RPM SFF HDD	SAS	1.2 TB
UCS-HD18TB10K4KN[1]	1.8 TB 12G SAS 10K RPM SFF HDD (4K)	SAS	1.8 TB
UCS-HD24TB10K4KN[1]	2.4 TB 12G SAS 10K RPM SFF HDD (4K)	SAS	2.4 TB
Enterprise Performance SAS/SATA SSDs (High endurance, supports up to 10X or 3X DWPD (drive writes per day))[2]			
UCS-SD19T63X-EP	1.9 TB 2.5in Enterprise performance 6GSATA SSD(3X endurance)	SATA	1.9 TB
UCS-SD960G63X-EP	960 GB 2.5in Enterprise performance 6GSATA SSD(3X endurance)	SATA	960 GB
UCS-SD480G63X-EP	480 GB 2.5in Enterprise Performance 6GSATA SSD(3X endurance)	SATA	480 GB
UCS-SD19TBM3X-EP	1.9TB 2.5in Enterprise performance 6GSATA SSD(3X endurance)	SATA	1.9 TB
UCS-SD960GBM3X-EP	960GB 2.5in Enterprise performance 6GSATA SSD(3X endurance)	SATA	960 GB
UCS-SD480GBM3X-EP	480GB 2.5in Enterprise Performance 6GSATA SSD(3X endurance)	SATA	480 GB
UCS-SD38T63X-EP	3.8TB 2.5in Enter Perf 6G SATA Intel SSD (3X)	SATA	3.8 TB
UCS-SD800GK3X-EP	800 GB 2.5in Enterprise Performance 12G SAS SSD(3X endurance)	SAS	800 GB
UCS-SD16TK3X-EP	1.6 TB 2.5in Enterprise Performance 12G SAS SSD(3X endurance)	SAS	1.6 TB
UCS-SD32TKA3X-EP	3.2TB 2.5in Enter Perf 12G SAS Kioxia G2 SSD (3X)	SAS	3.2 TB
UCS-SD16TKA3X-EP	1.6TB 2.5in Enterprise Performance 12G SAS SSD(3X endurance)	SAS	1.6 TB
UCS-SD800GS3X-EP	800GB 2.5in Enter Perf 12G SAS Seagate SSD (3X)	SAS	800 GB
UCS-SD16TS3X-EP	1.6TB 2.5in Enter Perf 12G SAS Seagate SSD (3X)	SAS	1.6 TB
UCS-SD32TS3X-EP	3.2TB 2.5in Enter Perf 12G SAS Seagate SSD (3X)	SAS	3.2 TB

Table 11 Available Hot-Pluggable Sled-Mounted Drives *(continued)*
UCSC-C220-M6S (10-drive system) and UCSC-C220-M6N (10-drive NVMe only system)

Product ID (PID)	PID Description	Drive Type	Capacity
Enterprise Value SAS/SATA SSDs (Low endurance, supports up to 1X DWPD (drive writes per day))[3]			
UCS-SD38T6I1X-EV	3.8 TB 2.5 inch Enterprise Value 6G SATA SSD	SATA	3.8 TB
UCS-SD960G6I1X-EV	960 GB 2.5 inch Enterprise Value 6G SATA SSD	SATA	960 GB
UCS-SD480G6I1X-EV	480 GB 2.5 inch Enterprise Value 6G SATA SSD	SATA	480 GB
UCS-SD19T61X-EV	1.9 TB 2.5 inch Enterprise Value 6G SATA SSD	SATA	1.9 TB
UCS-SD38T61X-EV	3.8 TB 2.5 inch Enterprise Value 6G SATA SSD	SATA	3.8 TB
UCS-SD120GM1X-EV	120 GB 2.5 inch Enterprise Value 6G SATA SSD	SATA	120 GB
UCS-SD960G6S1X-EV	960GB 2.5 inch Enterprise Value 6G SATA SSD	SATA	960 GB
UCS-SD19T6S1X-EV	1.9TB 2.5 inch Enterprise Value 6G SATA SSD	SATA	1.9 TB
UCS-SD38T6S1X-EV	3.8TB 2.5 inch Enterprise Value 6G SATA SSD	SATA	3.8 TB
UCS-SD76T6S1X-EV	7.6TB 2.5 inch Enterprise Value 6G SATA SSD	SATA	7.6 TB
UCS-SD240GBM1X-EV	240GB 2.5 inch Enterprise Value 6G SATA SSD	SATA	240 GB
UCS-SD480GBM1X-EV	480 GB 2.5 inch Enterprise Value 6G SATA SSD	SATA	480 GB
UCS-SD19TBM1X-EV	1.9TB 2.5 inch Enterprise Value 6G SATA SSD	SATA	1.9 TB
UCS-SD76TBM1X-EV	7.6TB 2.5 inch Enterprise Value 6G SATA SSD	SATA	7.6 TB
UCS-SD38TBM1X-EV	3.8TB 2.5 inch Enterprise Value 6G SATA SSD	SATA	3.8 TB
UCS-SD19TBM1X-EV	1.9TB 2.5 inch Enterprise Value 6G SATA SSD	SATA	1.9 TB
UCS-SD16TBM1X-EV	1.6TB 2.5 inch Enterprise Value 6G SATA SSD	SATA	1.6 TB
UCS-SD960GBM1X-EV	960GB 2.5 inch Enterprise Value 6G SATA SSD	SATA	960 GB
UCS-SD480GBM1X-EV	480GB 2.5 inch Enterprise Value 6G SATA SSD	SATA	480 GB
UCS-SD240GBM1X-EV	240GB 2.5 inch Enterprise Value 6G SATA SSD	SATA	240 GB
UCS-SD19TM1X-EV	1.9TB 2.5in Enter Value 6G SATA Micron G1 SSD	SATA	1.9 TB
UCS-SD960GK1X-EV	960 GB 2.5 inch Enterprise Value 12G SAS SSD	SAS	960 GB
UCS-SD19TK1X-EV	1.9 TB 2.5 inch Enterprise Value 12G SAS SSD	SAS	1.9 TB
UCS-SD15TKA1X-EV	15.3TB 2.5in Enter Value 12G SAS Kioxia G2 SSD	SAS	15.3 TB
UCS-SD76TKA1X-EV	7.6TB 2.5 inch Enterprise Value 12G SAS SSD	SAS	7.6 TB
UCS-SD38TKA1X-EV	3.8TB 2.5 inch Enterprise Value 12G SAS SSD	SAS	3.8 TB
UCS-SD19TKA1X-EV	1.9TB 2.5 inch Enterprise Value 12G SAS SSD	SAS	1.9 TB
Self-Encrypted Drives (SED)			
UCS-HD24T10NK9	2.4TB 10k rpm 4k SED HDD	SED	2.4 TB
UCS-HD18T10NK9	1.8TB 12G SAS 10K RPM SFF HDD (4K format, SED)	SED	1.8 TB
UCS-HD12T10NK9	1.2TB 12G SAS 10K RPM SFF HDD (SED-FIPS)	SED	1.2 TB
UCS-HD600G15NK9	600GB 12G SAS 15K RPM SFF HDD (SED)	SED	600 GB
UCS-SD800GBKNK9	800GB Enterprise Performance SAS SSD (3X DWPD, SED)	SED	800 GB
UCS-SD960GBKNK9	960GB Enterprise Value SAS SSD (1X DWPD, SED)	SED	960 GB
UCS-SD76TBKNK9	7.6TB Enterprise value SAS SSD (1 DWPD, SED-FIPS)	SED-FIPS	7.6 TB
UCS-SD38TBKNK9	3.8TB Enterprise Value SAS SSD (1X DWPD, SED)	SED	3.8 TB

Table 11 Available Hot-Pluggable Sled-Mounted Drives *(continued)*
UCSC-C220-M6S (10-drive system) and UCSC-C220-M6N (10-drive NVMe only system)

Product ID (PID)	PID Description	Drive Type	Capacity
UCS-SD16TBKNK9	1.6TB Enterprise performance SAS SSD (3X DWPD, SED)	SED	1.6 TB
UCS-SD76TEM2NK9	7.6TB Enterprise value SATA SSD (1X, SED)	SED	7.6 TB
UCS-SD960GM2NK9	960GB Enterprise value SATA SSD (1X , SED)	SED	960 GB
UCS-SD76TBKANK9	7.6TB Enterprise value SAS SSD (1 DWPD, SED-FIPS)	SED	7.6 TB
UCS-SD38TBKANK9	3.8TB 2.5in Enterprise value 12G SAS SSD (1DWPD, SED-FIPS)	SED	3.8 TB
UCS-SD16TBKANK9	1.6TB 2.5in Enter Perf 12G SAS Kioxia G2 SSD (3X SED-FIPS)	SED	1.6 TB
PCIe/NVMe SFF (2.5-inch) SFF drives[4]			
UCSC-NVMEXPB-I375	375GB 2.5in Intel® Optane™ NVMe Extreme Performance SSD	NVMe	375 GB
UCSC-NVMEXP-I750	750GB 2.5in Intel® Optane™ NVMe Extreme Perf.	NVMe	750 GB
UCS-NVMEI4-I1920	1.9TB 2.5in U.2 Intel P5500 NVMe High Perf Medium Endurance	NVMe	1.9 TB
UCS-NVMEI4-I1600	1.6TB 2.5in U.2 Intel P5600 NVMe High Perf Medium Endurance	NVMe	1.6 TB
UCS-NVMEI4-I3200	3.2TB 2.5in U.2 Intel P5600 NVMe High Perf Medium Endurance	NVMe	3.2 TB
UCS-NVMEXP-I400	400GB 2.5in U.2 Intel P5800X Optane NVMe Extreme Perform SSD	NVMe	400 GB
UCS-NVMEXP-I800	800GB 2.5in U.2Intel P5800X Optane NVMe Extreme Perform SSD	NVMe	800 GB
UCS-NVME4-1920	1.9TB 2.5in U.2 15mm P5520 Hg Perf Med End NVMe	NVMe	1,9 TB
UCS-NVME4-3840	3.8TB 2.5in U.2 15mm P5520 Hg Perf Med End NVMe	NVMe	3.8 TB
UCS-NVME4-7680	7.6TB 2.5in U.2 15mm P5520 Hg Perf Med End NVMe	NVMe	7.6 TB
UCS-NVME4-1536	15.3TB 2.5in U.2 15mm P5520 Hg Perf Med End NVMe	NVMe	15.3 TB
UCS-NVME4-1600	1.6TB 2.5in U.2 15mm P5620 Hg Perf Hg End NVMe (3X)	NVMe	1.6 TB
UCS-NVME4-3200	3.2TB 2.5in U.2 15mm P5620 Hg Perf Hg End NVMe (3X)	NVMe	3.2 TB
UCS-NVME4-6400	6.4TB 2.5in U.2 15mm P5620 Hg Perf Hg End NVMe (3X)	NVMe	6.4 TB
UCS-NVMEQ-1536	15.3TB 2.5in U.2 15mm P5316 Hg Perf Low End NVMe	NVMe	15.3 TB
UCS-NVMEM6-W3200	3.2TB 2.5in U.2 WD SN840 NVMe Extreme Perf. High Endurance	NVMe	3.2 TB
UCS-NVMEM6-W7680	7.6TB 2.5in U.2 WD SN840 NVMe Extreme Perf. Value Endurance	NVMe	7.6 TB
UCS-NVMEM6-W15300	15.3TB 2.5in U.2 WD SN840 NVMe Extreme Perf. Value Endurance	NVMe	15.3 TB
UCS-NVMEG4-M960	960GB 2.5in U.3 Micron P7450 NVMe High Perf Medium Endurance	NVMe	960 GB
UCS-NVMEG4-M1920	1.9TB 2.5in U.3 Micron P7450 NVMe High Perf Medium Endurance	NVMe	1.9 TB
UCS-NVMEG4-M3840	3.8TB 2.5in U.3 Micron P7450 NVMe High Perf Medium Endurance	NVMe	3.8 TB
UCS-NVMEG4-M7680	7.6TB 2.5in U.3 Micron P7450 NVMe High Perf Medium Endurance	NVMe	7.6 TB
UCS-NVMEG4-M1536	15.3TB 2.5in U.3 MicronP7450 NVMe High Perf Medium Endurance	NVMe	15.3 TB
UCS-NVMEG4-M1600	1.6TB 2.5in U.3 Micron P7450 NVMe High Perf High Endurance	NVMe	1.6 TB
UCS-NVMEG4-M3200	3.2TB 2.5in U.3 Micron P7450 NVMe High Perf High Endurance	NVMe	3.2 TB
UCS-NVMEG4-M6400	6.4TB 2.5in U.3 Micron P7450 NVMe High Perf High Endurance	NVMe	6.4 TB
NOTE: Cisco uses solid state drives from a number of vendors. All solid state drives are subject to physical write limits and have varying maximum usage limitation specifications set by the manufacturer. Cisco will not replace any solid state drives that have exceeded any maximum usage specifications set by Cisco or the manufacturer, as determined solely by Cisco.			

Notes:

1. Operating Systems that support 4k sector size drives are as follows:
   - CentOS 7.9/8.2/8.3 (and later)
   - Windows Server 2016/2019 (and later)
   - Red Hat Enterprise Linux 7.9/8.2 (and later)
   - SUSE Linux Enterprise Server 15.2 (and later)
   - ESXi 6.7 U3/7.0 U2 (and later)
   - See this link for operating system guidance: https://ucshcltool.cloudapps.cisco.com/public/
   - UEFI Mode must be used when booting from 4K sector size drives (legacy mode is not supported).
   - Ensure that 4K sector size and 512 byte sector size drives are not mixed in the same RAID volume.
2. Targeted for write centric IO applications. Supports endurance of 10 or 3 DWPD (drive writes per day). Target applications are caching, online transaction processing (OLTP), data warehousing, and virtual desktop infrastructure (VDI).
3. Targeted for read centric IO applications. Supports endurance of 1 DWPD (drive write per day). Target applications are boot, streaming media, and collaboration.
4. Except HGST, Intel and WD NVMe drives can be mixed.



NOTE: When configuring front facing drives with NVMe drives, you must order an NVMe cable (PID = CBL-FNVME-220M6) along with the drives.

Caveats

- With the UCSC-C220-M6S, you can choose only SATA HDDs when using AHCI with a SATA Interposer. The drives must be installed in slots 1-8.
- SFF NVMe drives are connected directly to CPU2 and not managed by any drive controller.
- You can mix HDDs and SSDs as long as you keep all HDDs in their own RAID volume and all SSDs in their own RAID volume.
- You can mix SAS HDDs and SAS/SATA SSDs when using the Cisco 12G RAID controller or Cisco 12G SAS controller.
- If you order any NVMe SFF drives, you must also order two CPUs.
- SFF NVMe drives are bootable in UEFI mode only.
- SED drives can be mixed with the non-SED drives in *Table 11 on page 34*.

Intel® Virtual RAID on CPU (Intel® VROC)

The server supports Intel® Virtual RAID on CPU (Intel® VROC). VROC is an enterprise RAID solution used with Intel NVMe SSDs (see *Table 11* for supported Intel NVMe SSDs). The Intel® Volume Management Device (Intel® VMD) is a controller integrated into the CPU PCIe root complex. Intel® VMD NVMe SSDs are connected to the CPU, which allows the full performance potential of fast Intel® Optane™ SSDs to be realized. Intel® VROC, when implemented, replaces traditional hardware RAID host bus adapter (HBA) cards placed between the drives and the CPU.



NOTE:

- Intel® VROC is only supported with Intel drives
- Intel® VROC enablement key factory pre-provisioned to BIOS - no additional licensing required.

VROC has the following features:

- Small Form Factor (SFF) drive support (only)
- No battery backup (BBU) or external SuperCap needed
- Software-based solution utilizing Intel SFF NVMe direct connected to Intel CPU
- RAID 0/1/5/10 support
- Windows, Linux, VMware OS support.
- Host Tools- Windows GUI/CLI, Linux CLI.
- UEFI Support- HII Utility, OBSE.
- Intel VROC NVMe operates in UEFI mode only

See the **instructions on setting up and managing VROC for Intel NVMe SSDs** for more information.

STEP 7 SELECT OPTION CARD(s)

For up-to-date server compatibility, please check the Hardware and Software compatibility list (HCL) at https://ucshcltool.cloudapps.cisco.com/public/.

The standard PCIe card offerings are:

- Open Compute Project (OCP)
- Modular LAN on Motherboard (mLOM)
- Virtual Interface Cards (VICs)
- Network Interface Cards (NICs)
- Nexus Smart NIC
- Host Bus Adapters (HBAs)

Select Option Cards

The available option cards are listed in ***Table 12***.

Table 12 Available PCIe Option Cards

Product ID (PID)	PID Description	Location	Card Size[1]
Modular LAN on Motherboard (mLOM)			
UCSC-M-V25-04	Cisco UCS VIC 1467 quad port 10/25G SFP28 mLOM	mLOM	HHHL, SS
UCSC-M-V100-04	Cisco UCS VIC 1477 dual port 40/100G QSFP28 mLOM	mLOM	HHHL, SS
UCSC-M-V5Q50G	Cisco UCS VIC 15428 quad port 10/25/50G MLOM	mLOM	HHHL, SS
UCSC-M-V5D200G	Cisco UCS VIC 15238 dual port 40/100/200G MLOM	mLOM	HHHL, SS
UCSC-M-V5Q50GV2[2]	Cisco UCS VIC 15427 Quad Port CNA MLOM with Secure Boot	mLOM	HHHL, SS
UCSC-M-V5D200GV2[2]	VIC 15237, MLOM, 2x40/100/200G for Rack	mLOM	HHHL, SS
Open Compute Project (OCP)			
UCSC-O-N6CD100GF	Cisco-NVDA MCX623436AC-CDAB CX6Dx 2x100G QSFP56 x16 OCP NIC	OCP	SFF
UCSC-O-N6CD25GF	Cisco-NVDA MCX631432AC-ADAB CX6Lx 2x25G SFP28 x8 OCP NIC	OCP	SFF
Virtual Interface Card (VICs)[3]			
UCSC-PCIE-C100-04	Cisco UCS VIC 1495 Dual Port 40/100G QSFP28 CNA PCIe	Riser 1, 2, or 3	HHHL, SS
UCSC-PCIE-C25Q-04	Cisco UCS VIC 1455 quad port 10/25G SFP28 PCIe	Riser 1, 2, or 3	HHHL, SS
UCSC-P-V5Q50G	Cisco UCS VIC 15425 Quad Port 10/25/50G CNA PCIE	Riser 1, 2, or 3	HHHL, SS
UCSC-P-V5D200G	Cisco UCS VIC 15235 Dual Port 40/100/200G CNA PCIE	Riser 1, 2, or 3	HHHL, SS
Network Interface Cards (NICs)			
1 Gb NICs			
UCSC-PCIE-IRJ45	Intel i350 quad-port 1G copper PCIe	Riser 1, 2, or 3	HHHL, SS
10 Gb NICs			

Table 12 Available PCIe Option Cards *(continued)*

Product ID (PID)	PID Description	Location	Card Size[1]
UCSC-PCIE-ID10GF	Intel X710-DA2 Dual Port 10Gb SFP+ NIC	Riser 1, 2, or 3	HHHL, SS
UCSC-PCIE-IQ10GF	Intel X710 quad-port 10G SFP+ NIC	Riser 1, 2, or 3	HHHL, SS
UCSC-P-ID10GC	Cisco-Intel X710T2LG 2x10 GbE RJ45 PCIe NIC	Riser 1, 2, or 3	HHHL, SS
UCSC-P-IQ10GC	Cisco-Intel X710T4LG 4x10 GbE RJ45 PCIe NIC	Riser 1, 2, or 3	HHHL, SS
25 Gb NICs			
UCSC-P-I8D25GF[4]	Cisco-Intel E810XXVDA2 2x25/10 GbE SFP28 PCIe NIC	Riser 1, 2, or 3	HHHL, SS
UCSC-P-M5D25GF[4]	Mellanox MCX512A-ACAT dual port 10/25G SFP28 NIC	Riser 1, 2, or 3	HHHL, SS
UCSC-P-I8Q25GF[4,5]	Cisco-Intel E810XXVDA4L 4x25/10 GbE SFP28 PCIe NIC	Riser 1 or 2	FHHL, SS
UCSC-P-N6D25GF	Cisco-NVDA MCX631102AS-ADAT CX6Lx 2x25GbE SFP28 x8 PCIe NIC	Riser 1, 2, or 3	HHHL, SS
40 Gb NICs			
UCSC-PCIE-ID40GF	Intel XL710 dual-port 40G QSFP+ NIC	Riser 1, 2, or 3	HHHL, SS
100 Gb NICs			
UCSC-P-M5D100GF[4]	Mellanox CX-5 MCX516A-CDAT 2x100GbE QSFP PCIe NIC	Riser 1, 2, or 3	HHHL, SS
UCSC-P-M6CD100GF[4]	Cisco-MLNX MCX623106AC-CDAT 2x100GbE QSFP56 PCIe NIC (with Crypto)	Riser 1, 2, or 3	HHHL, SS
UCSC-P-M6DD100GF[4]	Cisco-MLNX MCX623106AS-CDAT 2x100GbE QSFP56 PCIe NIC	Riser 1, 2, or 3	HHHL, SS
UCSC-P-I8D100GF[4]	Cisco-Intel E810CQDA2 2x100 GbE QSFP28 PCIe NIC	Riser 1, 2, or 3	HHHL, SS
Nexus Smart NIC			
NXN-K3P-2X	Nexus X25 2-port SFP28 SmartNIC (2-channel), KU3P FPGA	Riser 1, 2, or 3	HHHL, SS
NXN-K3P-2X-4GB	Nexus X25 2-port SFP28 SmartNIC (2-channel), KU3P FPGA, 4GB	Riser 1, 2, or 3	HHHL, SS
NXN-K3P-8X	Nexus X100 2-port QSFP28 SmartNIC (8-channel), KU3P FPGA	Riser 1, 2, or 3	HHHL, SS
NXN-K3P-8X-9GB	Nexus X100 2p QSFP28 SmartNIC (8-channel), KU3P FPGA, 9GB	Riser 1, 2, or 3	HHHL, SS
NXN-V9P-16X-9GB	Nexus 2-port QDD SmartNIC+ (16-channel), VU9P FPGA, 9GB DDR	Riser 1, 2, or 3	HHHL, SS
Host Bus Adapters (HBAs)			
UCSC-P-Q6D32GF	Cisco-QLogic QLE2772 2x32GFC Gen 6 Enhanced PCIe HBA	Riser 1, 2, or 3	HHHL, SS
UCSC-P-B7D32GF	Cisco-Emulex LPe35002-M2-2x32GFC Gen 7 PCIe HBA	Riser 1, 2, or 3	HHHL, SS
UCSC-PCIE-QD16GF	Qlogic QLE2692 dual-port 16G FC HBA	Riser 1, 2, or 3	HHHL, SS
UCSC-PCIE-BD16GF	Emulex LPe31002 dual port 16G FC HBA	Riser 1, 2, or 3	HHHL, SS
External Storage HBA			
UCSC-9500-8E	9500 Series PCIe Gen 4.0 Tri-Mode Storage HBA 12Gb/s SAS/SATA/PCIe (NVMe)	Riser 1, 2, or 3	HHHL, SS

Notes:

1. HHHL = half-height, half-length; FHHL = full-height, half-length; SS = single-slot; DS = double-slot.
2. Can not be mixed with 1400 series VICs

3. VICs can be placed/installed in riser 1 or 3 only using half height riser combination. For full height, you can use either card for the VICs.
4. When present, the recommended Fan Speed Control policy setting is balanced.
5. If UCSC-P-I8Q25GF selected then UCSC-GPURKIT-C220 riser is required.

Approved Configurations

(1) 1-CPU Systems

- You can select up to one of the PCIe option cards listed in ***Table 12*** to be installed in Riser 1 and one in Riser 2 if selected. Risers 1 and 2 are controlled by CPU 1. Riser 3 is not installed in a 1-CPU system.

(2) 2-CPU Systems

- You can select up to two of the PCIe option cards listed in ***Table 12*** for a two-riser system (Riser 1 and Riser 2 installed) and up to three of the PCIe option cards for a three-riser system (Riser 1, Riser 2, and Riser 3 installed). Risers 1 and 2 are controlled by CPU 1 and riser 3 is controlled by CPU 2.

Caveats

- For 1-CPU systems:
  - Half Height Riser 1 and Riser 2 is supported, Full Height Riser 1 only supported.
  - Only a single plug-in PCIe VIC card is supported and must be installed in Riser 1. However, in addition to the one PCIe VIC card, you can also choose to install an mLOM VIC card in the mLOM slot at the rear of the chassis.
- For 2-CPU systems:
  - All risers (Risers 1, 2, and 3) are supported
  - Two plug-in PCIe VIC cards can be installed in 2-CPU systems. VICs can be placed in Riser 1 or 3 only for 1U in half height riser combination. For full height riser, you can use either Riser 1 or 2 for the VICs. In addition, you can order an mLOM VIC card, which is installed in the mLOM slot at the rear of the chassis and thus have three VIC cards in operation at the same time. See ***Table 12 on page 39*** for the selection of plug-in and mLOM VIC cards. See also ***Table 1 on page 12***.
- To help ensure that your operating system is compatible with the card you have selected, or to see additional cards that have been qualified to work with the UCS C220 M6 server, but are not sold on the Cisco pricelist, check the Hardware Compatibility List at this URL: **http://www.cisco.com/en/US/products/ps10477/prod_technical_reference_list.html**

ORDER OPTIONAL PCIe OPTION CARD ACCESSORIES

- These optics and cables have been tested for compatibility and are approved for use with Ethernet Network Adapter (as of the time of this publication). For the latest update, check the and consult Cisco Compatibility Matrix at https://tmgmatrix.cisco.com.
- For list of supported optics and cables for VIC 1455, VIC 1467, VIC 1495 and VIC 1477, refer to the VIC 1300 and VIC 1400 series data sheets at the following links:
  - https://www.cisco.com/c/en/us/products/servers-unified-computing/ucs-b-series-blade-servers/datasheet-listing.html
  - https://www.cisco.com/c/en/us/products/collateral/interfaces-modules/unified-computing-system-adapters/datasheet-c78-741130.html

The information in the preceding tables was compiled from testing conducted by Cisco Transceiver Module Group (TMG) and vendors. The latest compatibility with optical modules and DACs can be found at https://tmgmatrix.cisco.com/.

Refer to the these links for additional connectivity options.

Intel:	Marvell/Qlogic:	Mellanox:
Product Guide	41000 series Interoperability Matrix	Firmware Release Notes
Speed White Paper	45000 series Interoperability Matrix	

STEP 8 ORDER GPU CARDS (OPTIONAL)

Select GPU Options

The available GPU PCIe options are listed in *Table 13*.

Table 13 Available PCIe GPU Cards[1]

Product ID (PID)	PID Description	Card Size	Maximum cards Per node
UCSC-GPU-T4-16	NVIDIA T4 PCIE 75W 16GB	HHHL, single-wide	3

Notes:

1. Refer to 220 M6 installation guide for more details.



NOTE:

- All GPU cards must be procured from Cisco as there is a unique SBIOS ID required by CIMC and UCSM
- GPUs cannot be mixed.
- For the maximum of 3x T4 GPUs, the 3x half slot riser should be selected.
- A GPU can be installed in either full-height PCIe riser 1 or 2 (or both) **or** can be installed in three half-height riser 1, 2, or 3.

STEP 9 ORDER POWER SUPPLY

Power supplies share a common electrical and physical design that allows for hot-plug and tool-less installation into M6 C-series servers. Each power supply is certified for high-efficiency operation and offers multiple power output options. This allows users to “right-size” based on server configuration, which improves power efficiency, lowers overall energy costs and avoids stranded capacity in the data center. Use the power calculator at the following link to determine the needed power based on the options chosen (CPUs, drives, memory, and so on):

http://ucspowercalc.cisco.com

WARNING:

- Starting 1st January 2024, only Titanium rated PSUs are allowed to be shipped to European Union (EU), European Economic Area (EEA), United Kingdom (UK), Switzerland and other countries that adopted Lot 9 Regulation.
- DC PSUs are not impacted by Lot 9 Regulation and are EU/UK Lot 9 compliant

Table 14 Power Supply

Product ID (PID)	PID Description
PSU (Input High Line 210VAC)	
UCSC-PSU1-1050W	UCS 1050W AC PSU Platinum (Not EU/UK Lot 9 Compliant)
UCSC-PSUV2-1050DC	Cisco UCS 1050W -48V DC Power Supply for Rack Server Requires cable CAB-48DC-40A-8AWG
UCSC-PSU1-1200W	1200W Titanium power supply for C-Series Servers
UCSC-PSU1-1600W	UCS 1600W AC PSU Platinum (Not EU/UK Lot 9 Compliant)
UCSC-PSU1-2300W[1]	2300W Power supply for C-series servers **Titanium**
PSU (Input Low Line 110VAC)	
UCSC-PSU1-1050W	UCS 1050W AC PSU Platinum (Not EU/UK Lot 9 Compliant)
UCSC-PSUV2-1050DC	Cisco UCS 1050W -48V DC Power Supply for Rack Server Requires cable CAB-48DC-40A-8AWG
UCSC-PSU1-1050ELV	1050W AC PSU Enhanced Low Line (Not EU/UK Lot 9 Compliant) **Platinum**
UCSC-PSU1-1200W	1200W Titanium power supply for C-Series Servers
UCSC-PSU1-1600W	UCS 1600W AC PSU Platinum (Not EU/UK Lot 9 Compliant)
UCSC-PSU1-2300W	2300W Power supply for C-series servers **Titanium**

Notes:

1. The 2300 W power supply uses a different power connector that the rest of the power supplies, so you must use different power cables to connect it. See *Table 15 on page 45* and *Table 16 on page 48*.

NOTE:

- In a server with two power supplies, both power supplies must be identical.
- DC PSUs are not impacted by Lot 9 Regulation and are EU/UK Lot 9 compliant

STEP 10 SELECT INPUT POWER CORD(s)

Using *Table 15* and *Table 16*, select the appropriate AC power cords. You can select a minimum of no power cords and a maximum of two. If you select the option R2XX-DMYMPWRCORD, no power cord is shipped with the server.

NOTE: *Table 15* lists the power cords for servers that use power supplies less than 2300 W. *Table 16* lists the power cords for servers that use 2300 W power supplies. Note that the power cords for 2300 W power supplies use a C19 connector so they only fit the 2300 W power supply connector.

Table 15 Available Power Cords (for server PSUs less than 2300 W)

Product ID (PID)	PID Description	Images
NO-POWER-CORD	ECO friendly green option, no power cable will be shipped	
R2XX-DMYMPWRCORD	No power cord (dummy PID to allow for a no power cord option)	Not applicable
CAB-48DC-40A-8AWG	C-Series -48VDC PSU Power Cord, 3.5M, 3 Wire, 8AWG, 40A	
CAB-N5K6A-NA	Power Cord, 200/240V 6A, North America	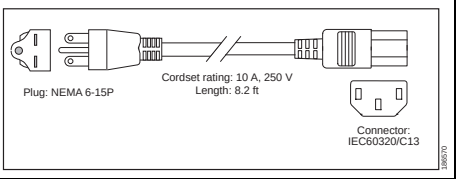
CAB-AC-L620-C13	AC Power Cord, NEMA L6-20 - C13, 2M/6.5ft	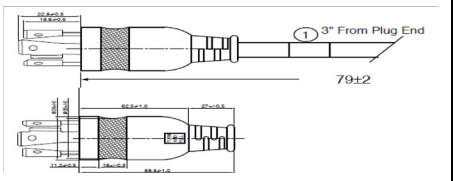
CAB-C13-CBN	CABASY,WIRE,JUMPER CORD, 27" L, C13/C14, 10A/250V	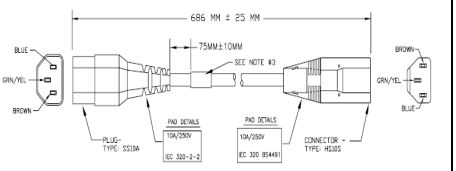
CAB-C13-C14-2M	CABASY,WIRE,JUMPER CORD, PWR, 2 Meter, C13/C14,10A/250V	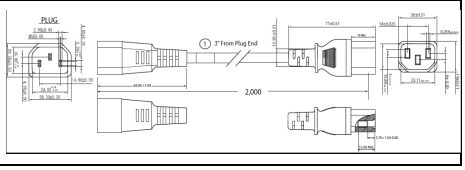

Table 15 Available Power Cords (for server PSUs less than 2300 W)

Product ID (PID)	PID Description	Images
CAB-C13-C14-AC	CORD,PWR,JMP,IEC60320/C14,IEC60320/C13, 3.0M	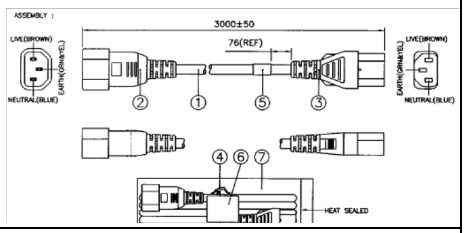
CAB-250V-10A-AR	Power Cord, 250V, 10A, Argentina	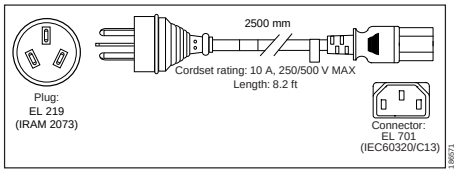
CAB-9K10A-AU	Power Cord, 250VAC 10A 3112 Plug, Australia	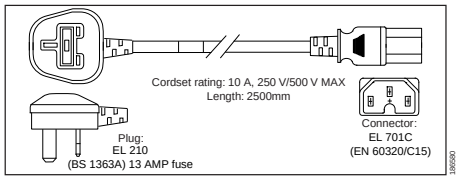
CAB-250V-10A-CN	AC Power Cord - 250V, 10A - PRC	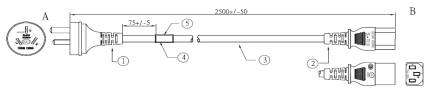
CAB-9K10A-EU	Power Cord, 250VAC 10A CEE 7/7 Plug, EU	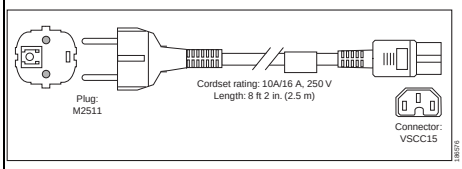
CAB-250V-10A-ID	Power Cord, 250V, 10A, India	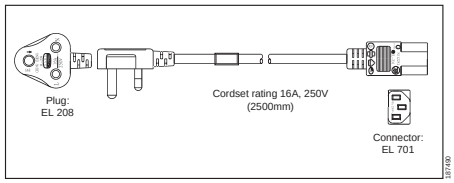
CAB-C13-C14-3M-IN	Power Cord Jumper, C13-C14 Connectors, 3 Meter Length, India	Image not available
CAB-C13-C14-IN	Power Cord Jumper,C13-C14 Connectors,1.4 Meter Length, India	Image not available
CAB-250V-10A-IS	Power Cord, SFS, 250V, 10A, Israel	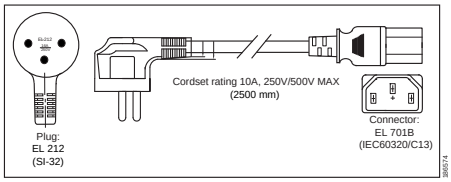

Table 15 Available Power Cords (for server PSUs less than 2300 W)

Product ID (PID)	PID Description	Images
CAB-9K10A-IT	Power Cord, 250VAC 10A CEI 23-16/VII Plug, Italy	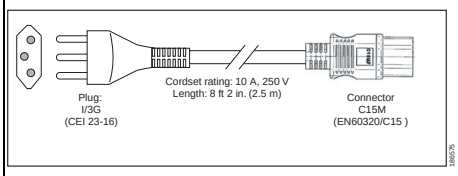
CAB-9K10A-SW	Power Cord, 250VAC 10A MP232 Plug, Switzerland	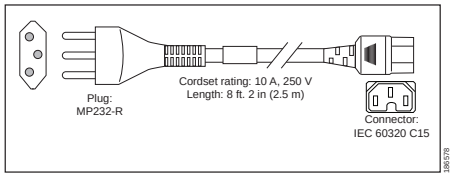
CAB-9K10A-UK	Power Cord, 250VAC 10A BS1363 Plug (13 A fuse), UK	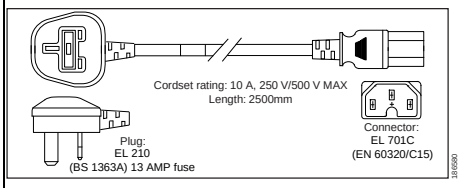
CAB-9K12A-NA[1]	Power Cord, 125VAC 13A NEMA 5-15 Plug, North America	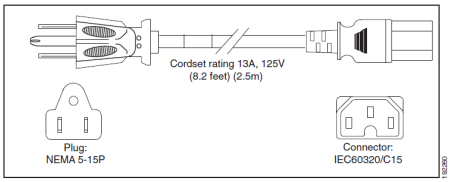
CAB-250V-10A-BR	Power Cord - 250V, 10A - Brazil	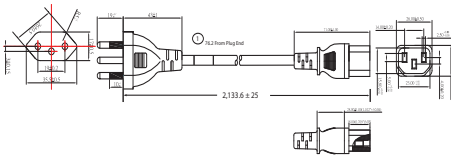
CAB-C13-C14-2M-JP	Power Cord C13-C14, 2M/6.5ft Japan PSE mark	Image not available
CAB-9K10A-KOR[1]	Power Cord, 125VAC 13A KSC8305 Plug, Korea	Image not available
CAB-ACTW	AC Power Cord (Taiwan), C13, EL 302, 2.3M	Image not available
CAB-JPN-3PIN	Japan, 90-125VAC 12A NEMA 5-15 Plug, 2.4m	Image not available
CAB-48DC-40A-INT	C-Series -48VDC PSU PWR Cord, 3.5M, 3 Wire, 8AWG, 40A (INT)	Image not available
CAB-48DC-40A-AS	C-Series -48VDC PSU PWR Cord, 3.5M, 3Wire, 8AWG, 40A (AS/NZ)	Image not available

Notes:

1. This power cord is rated to 125V and only supported for PSU rated at 1050W or less

Table 16 Available Power Cords (for servers with 2300 W PSUs)

Product ID (PID)	PID Description	Images
CAB-C19-CBN	Cabinet Jumper Power Cord, 250 VAC 16A, C20-C19 Connectors	Not applicable
CAB-S132-C19-ISRL	S132 to IEC-C19 14ft Israeli	Image not available
CAB-IR2073-C19-AR	IRSM 2073 to IEC-C19 14ft Argen	Image not available
CAB-BS1363-C19-UK	BS-1363 to IEC-C19 14ft UK	Image not available
CAB-SABS-C19-IND	SABS 164-1 to IEC-C19 India	Image not available
CAB-C2316-C19-IT	CEI 23-16 to IEC-C19 14ft Italy	Image not available
CAB-US515P-C19-US	NEMA 5-15 to IEC-C19 13ft US	Image not available
CAB-US520-C19-US	NEMA 5-20 to IEC-C19 14ft US	Image not available
CAB-US620P-C19-US	NEMA 6-20 to IEC-C19 13ft US	Image not available
CAB-9K16A-BRZ	Power Cord 250VAC 16A, Brazil, Src Plug EL224-C19	Image not available
CAB-9K16A-KOR	Power Cord 250VAC 16A, Korea, Src Plug	Image not available
CAB-AC-16A-AUS	Power Cord, 250VAC, 16A, Australia C19	Image not available
CAB-AC-2500W-EU	Power Cord, 250Vac 16A, Europe	Image not available
CAB-AC-2500W-INT	Power Cord, 250Vac 16A, INTL	Image not available
CAB-AC-2500W-ISRL	Power Cord,250VAC,16A,Israel	Image not available
CAB-AC-C19-TW	Power Cord, 250 V, 16A, C19, Taiwan	Image not available
CAB-AC-C6K-TWLK	Power Cord, 250Vac 16A, twist lock NEMA L6-20 plug, US	Image not available
CAB-AC16A-CH	16A AC Power Cord For China	Image not available
CAB-ACS-16	AC Power Cord (Swiss) 16A	Image not available
CAB-C19-C20-3M-JP	Power Cord C19-C20, 3M/10ft Japan PSE mark	Image not available
CAB-C19-C20-IND	Power Cord C19-C20 India	Image not available
UCSB-CABL-C19-BRZ	NBR 14136 to C19 AC 14FT POWER CORD, BRAZIL	Image not available
NO-POWER-CORD	ECO friendly green option, no power cable will be shipped	Image not available
R2XX-DMYMPWRCORD	No power cord option Not valid for delivery destination in Argentina, Brazil, Japan	Image not available

STEP 11 ORDER TOOL-LESS RAIL KIT AND OPTIONAL REVERSIBLE CABLE MANAGEMENT ARM

Select a Tool-less Rail Kit

Select a tool-less rail kit from *Table 17*.

Table 17 Tool-less Rail Kit Options

Product ID (PID)	PID Description
UCSC-RAIL-M6	Ball Bearing Rail Kit for C220 and C240 M6 rack servers
UCSC-RAIL-NONE	No rail kit option

NOTE: Cisco recommends a minimum quantity of 1 Rail Kit.

Select an Optional Reversible Cable Management Arm

The reversible cable management arm mounts on either the right or left slide rails at the rear of the server and is used for cable management. Use *Table 18* to order a cable management arm.

Table 18 Cable Management Arm

Product ID (PID)	PID Description
UCSC-CMA-C220M6	Reversible CMA for C220 M6 ball bearing rail kit

For more information about the tool-less rail kit and cable management arm, see the *Cisco UCS C220 M6 Installation and Service Guide* at this URL:

https://www.cisco.com/content/en/us/td/docs/unified_computing/ucs/c/hw/c220m6/install/c220m6.html

NOTE: If you plan to rackmount your UCS C220 M6 server, you must order a tool-less rail kit.The same rail kits and CMAs are used for M5 and M6 servers.

STEP 12 SELECT MANAGEMENT CONFIGURATION (OPTIONAL)

By default, the C220 M6 server NIC mode is configured to be Shared LOM Extended. This NIC mode allows any LOM port or adapter card port to be used to access the Cisco Integrated Management Controller (CIMC). The Cisco VIC card must be installed in a slot with NCSI support.

To change the default NIC mode to Dedicated, select the UCSC-DLOM-01 PID shown in ***Table 19***. In Dedicated NIC mode, the CIMC can be accessed only through the dedicated management port. See ***Chassis Rear View (two full-height, 3/4-length PCIe risers), page 11*** for the location of the management port.

To change the default NIC mode to Cisco Card Mode, select the UCSC-CCARD-01 PID shown in ***Table 19***. In this mode, you can assign an IP address to the CIMC using DHCP and from there you can fully automate your deployment.

For more details on all the NIC mode settings, see

https://www.cisco.com/c/en/us/td/docs/unified_computing/ucs/c/hw/C480M5/install/C480M5/C480M5_chapter_010.html#concept_srqj_vsr_fz

Table 19 Management Configuration Ordering Information

Product ID (PID)	PID Description
UCSC-DLOM-01	Dedicated Mode BIOS setting for C-Series Servers
UCSC-CCARD-01	Cisco Card Mode BIOS setting for C-Series Servers

STEP 13 SELECT SERVER BOOT MODE (OPTIONAL)

By default, the C220 M6 SFF server ships with UEFI as the default boot mode. To have a server shipped with the Legacy BIOS mode (which was standard on M4 and previous generation servers), select the Legacy BIOS PID from *Table 20*.

Table 20 Server Boot Mode Ordering Information

Product ID (PID)	PID Description
UCSC-LBIOS-01	Legacy Boot Mode BIOS setting for C-Series Servers

STEP 14 ORDER SECURITY DEVICES (OPTIONAL)

A Trusted Platform Module (TPM) is a computer chip (microcontroller) that can securely store artifacts used to authenticate the platform (server). These artifacts can include passwords, certificates, or encryption keys. A TPM can also be used to store platform measurements that help ensure that the platform remains trustworthy. Authentication (ensuring that the platform can prove that it is what it claims to be) and attestation (a process helping to prove that a platform is trustworthy and has not been breached) are necessary steps to ensure safer computing in all environments.

A chassis intrusion switch gives a notification of any unauthorized mechanical access into the server.

The security device ordering information is listed in *Table 21*.

Table 21 Security Devices

Product ID (PID)	PID Description
UCSX-TPM-002C	Trusted Platform Module 2.0 for UCS servers
UCSC-INT-SW02	C220 and C240 M6 Chassis Intrusion Switch
UCSX-TPM-OPT-OUT	OPT OUT, TPM 2.0, TCG, FIPS140-2, CC EAL4+ Certified[1]

Notes:

1. Please note that Microsoft certification requires a TPM 2.0 for bare-metal or guest VM deployments. Opt-out of the TPM 2.0 voids the Microsoft certification

NOTE:

- The TPM module used in this system conforms to TPM v1.2 and 2.0, as defined by the Trusted Computing Group (TCG). It is also SPI-based.
- TPM installation is supported after-factory. However, a TPM installs with a one-way screw and cannot be replaced, upgraded, or moved to another server. If a server with a TPM is returned, the replacement server must be ordered with a new TPM.

STEP 15 SELECT LOCKING SECURITY BEZEL (OPTIONAL)

An optional locking bezel can be mounted to the front of the chassis to prevent unauthorized access to the drives.

Select the locking bezel from *Table 22*.

Table 22 Locking Bezel Option

Product ID (PID)	Description
UCSC-BZL-C220M5	C220 M5 Security Bezel

STEP 16 ORDER M.2 SATA SSDs (OPTIONAL)

Order one or two matching M.2 SATA SSDs along with a boot-optimized RAID controller. See *Figure 8 on page 64* for the location of the module connector on the motherboard. This connector accepts the boot-optimized RAID controller (see *Table 24*). Each boot-optimized RAID controller can accommodate up to two SATA M.2 SSDs shown in *Table 23*.

Each boot-optimized RAID controller can accommodate up to two SATA M.2 SSDs shown in *Table 23*.

NOTE: It is recommended that M.2 SATA SSDs be used as boot-only devices.

Table 23 M.2 SATA SSDs

Product ID (PID)	PID Description
UCS-M2-I240GB	240GB SATA M.2 SSD
UCS-M2-I480GB	480GB SATA M.2 SSD
UCS-M2-240G	240GB SATA M.2
UCS-M2-480G	480GB M.2 SATA SSD
UCS-M2-960G	960GB SATA M.2

Order the UCS-M2-HWRAID Boot-Optimized RAID controller from *Table 24*. The Boot-Optimized RAID controller plugs into a connector on the motherboard and holds up to two M.2 SATA drives.

NOTE: The Boot-Optimized RAID controller supports VMWare, Windows and Linux Operating Systems

Table 24 Mini Storage Carrier/Boot-Optimized RAID Controller

Product ID (PID)	PID Description
UCS-M2-HWRAID	Cisco Boot optimized M.2 RAID controller (holds up to two M.2 SATA SSDs)

NOTE:

- The UCS-M2-HWRAID boot-optimized RAID controller supports RAID 1 and JBOD mode
- CIMC is supported for configuring of volumes and monitoring of the controller and installed SATA M.2 drives
- The minimum version of Cisco IMC and Cisco UCS Manager that supports this controller is 4.2(1) and later. The name of the controller in the software is MSTOR-RAID
- The SATA M.2 drives can boot in UEFI mode only. Legacy boot mode is not supported
- Hot-plug replacement is not supported. The server must be powered off.

Caveats

- Order one or two identical M.2 SATA SSDs for the boot-optimized RAID controller. You cannot mix M.2 SATA SSD capacities.

STEP 17 SELECT OPERATING SYSTEM AND VALUE-ADDED SOFTWARE

NOTE:

- See this link for operating system guidance: https://ucshcltool.cloudapps.cisco.com/public/
- VMware is on Compliance Hold. Contact the Compute-Vmware-Hold@cisco.com mailer to see if you are allowed to receive VMware Licenses

Select

- OEM Software (*Table 25*)
- Operating System (*Table 26*)
- NVIDIA GPU Licenses (*Table 27 on page 59*)

Table 25 OEM Software

Product ID (PID)	PID Description
VMware vCenter	
VMW-VCS-STD-1A	VMware vCenter 6 Server Standard, 1 yr support required
VMW-VCS-STD-3A	VMware vCenter 6 Server Standard, 3 yr support required
VMW-VCS-STD-5A	VMware vCenter 6 Server Standard, 5 yr support required
VMW-VCS-FND-1A	VMware vCenter 6 Server Foundation (4 Host), 1 yr supp reqd
VMW-VCS-FND-3A	VMware vCenter 6 Server Foundation (4 Host), 3 yr supp reqd
VMW-VCS-FND-5A	VMware vCenter 6 Server Foundation (4 Host), 5 yr supp reqd

Table 26 Operating System

Product ID (PID)	PID Description
Microsoft Windows Server	
MSWS-19-DC16C	Windows Server 2019 Data Center (16 Cores/Unlimited VMs)
MSWS-19-DC16C-NS	Windows Server 2019 DC (16 Cores/Unlim VMs) - No Cisco SVC
MSWS-19-ST16C	Windows Server 2019 Standard (16 Cores/2 VMs)
MSWS-19-ST16C-NS	Windows Server 2019 Standard (16 Cores/2 VMs) - No Cisco SVC

Table 26 Operating System *(continued)*

Product ID (PID)	PID Description
MSWS-22-DC16C	Windows Server 2022 Data Center (16 Cores/Unlimited VMs)
MSWS-22-DC16C-NS	Windows Server 2022 DC (16 Cores/Unlim VMs) - No Cisco SVC
MSWS-22-DCA2C	Windows Server 2022 Data Center - Additional 2 Cores
MSWS-22-DCA2C-NS	Windows Server 2022 DC - Additional 2 Cores - No Cisco SVC
MSWS-22-ST16C	Windows Server 2022 Standard (16 Cores/2 VMs)
MSWS-22-ST16C-NS	Windows Server 2022 Standard (16 Cores/2 VMs) - No Cisco SVC
MSWS-22-STA2C	Windows Server 2022 Standard - Additional 2 Cores
MSWS-22-STA2C-NS	Windows Server 2022 Stan - Additional 2 Cores - No Cisco SVC
Red Hat	
RHEL-2S2V-1A	Red Hat Enterprise Linux (1-2 CPU,1-2 VN); 1-Yr Support Req
RHEL-2S2V-3A	Red Hat Enterprise Linux (1-2 CPU,1-2 VN); 3-Yr Support Req
RHEL-2S2V-5A	Red Hat Enterprise Linux (1-2 CPU,1-2 VN); 5-Yr Support Req
RHEL-VDC-2SUV-1A	RHEL for Virt Datacenters (1-2 CPU, Unlim VN) 1 Yr Supp Req
RHEL-VDC-2SUV-3A	RHEL for Virt Datacenters (1-2 CPU, Unlim VN) 3 Yr Supp Req
RHEL-VDC-2SUV-5A	RHEL for Virt Datacenters (1-2 CPU, Unlim VN) 5 Yr Supp Req
Red Hat Ent Linux/ High Avail/ Res Strg/ Scal	
RHEL-2S2V-1S	Red Hat Enterprise Linux (1-2 CPU,1-2 VN); Prem 1-Yr SnS
RHEL-2S2V-3S	Red Hat Enterprise Linux (1-2 CPU,1-2 VN); Prem 3-Yr SnS
RHEL-2S-HA-1S	RHEL High Availability (1-2 CPU); Premium 1-yr SnS
RHEL-2S-HA-3S	RHEL High Availability (1-2 CPU); Premium 3-yr SnS
RHEL-2S-RS-1S	RHEL Resilient Storage (1-2 CPU); Premium 1-yr SnS
RHEL-2S-RS-3S	RHEL Resilient Storage (1-2 CPU); Premium 3-yr SnS
RHEL-VDC-2SUV-1S	RHEL for Virt Datacenters (1-2 CPU, Unlim VN) 1 Yr SnS Reqd
RHEL-VDC-2SUV-3S	RHEL for Virt Datacenters (1-2 CPU, Unlim VN) 3 Yr SnS Reqd
Red Hat SAP	
RHEL-SAP-2S2V-1S	RHEL for SAP Apps (1-2 CPU, 1-2 VN); Prem 1-Yr SnS
RHEL-SAP-2S2V-3S	RHEL for SAP Apps (1-2 CPU, 1-2 VN); Prem 3-Yr SnS
VMware	
VMW-VSP-STD-1A	VMware vSphere 6 Standard (1 CPU), 1-yr, Support Required

Table 26 Operating System *(continued)*

Product ID (PID)	PID Description
VMW-VSP-STD-3A	VMware vSphere 6 Standard (1 CPU), 3-yr, Support Required
VMW-VSP-STD-5A	VMware vSphere 6 Standard (1 CPU), 5-yr, Support Required
VMW-VSP-EPL-3A	VMware vSphere 6 Ent Plus (1 CPU), 3-yr, Support Required
VMW-VSP-EPL-1A	VMware vSphere 6 Ent Plus (1 CPU), 1-yr, Support Required
VMW-VSP-EPL-5A	VMware vSphere 6 Ent Plus (1 CPU), 5-yr, Support Required
SUSE	
SLES-2S2V-1A	SUSE Linux Enterprise Svr (1-2 CPU,1-2 VM); 1-Yr Support Req
SLES-2S2V-3A	SUSE Linux Enterprise Svr (1-2 CPU,1-2 VM); 3-Yr Support Req
SLES-2S2V-5A	SUSE Linux Enterprise Svr (1-2 CPU,1-2 VM); 5-Yr Support Req
SLES-2S2V-1S	SUSE Linux Enterprise Svr (1-2 CPU,1-2 VM); Prio 1-Yr SnS
SLES-2S2V-3S	SUSE Linux Enterprise Svr (1-2 CPU,1-2 VM); Prio 3-Yr SnS
SLES-2S2V-5S	SUSE Linux Enterprise Svr (1-2 CPU,1-2 VM); Prio 5-Yr SnS
SLES-2S-HA-1S	SUSE Linux High Availability Ext (1-2 CPU); 1yr SnS
SLES-2S-HA-3S	SUSE Linux High Availability Ext (1-2 CPU); 3yr SnS
SLES-2S-HA-5S	SUSE Linux High Availability Ext (1-2 CPU); 5yr SnS
SLES-2S-GC-1S	SUSE Linux GEO Clustering for HA (1-2 CPU); 1yr Sns
SLES-2S-GC-3S	SUSE Linux GEO Clustering for HA (1-2 CPU); 3yr SnS
SLES-2S-GC-5S	SUSE Linux GEO Clustering for HA (1-2 CPU); 5yr SnS
SLES-2S-LP-1S	SUSE Linux Live Patching Add-on (1-2 CPU); 1yr SnS Required
SLES-2S-LP-3S	SUSE Linux Live Patching Add-on (1-2 CPU); 3yr SnS Required
SLES-2S-LP-1A	SUSE Linux Live Patching Add-on (1-2 CPU); 1yr Support Req
SLES-2S-LP-3A	SUSE Linux Live Patching Add-on (1-2 CPU); 3yr Support Req
SLES-2SUVM-1A	SUSE Linux Enterprise Svr (1-2 CPU,Unl VM) LP; 1Y Supp Req
SLES-2SUVM-1S	SUSE Linux Enterprise Svr (1-2 CPU,Unl VM) LP; Prio 1Y SnS
SLES-2SUVM-1YR	SUSE Linux Entp Svr (1-2 CPU,Unl VM) LP; Prio SnS 24x7 - 1Y
SLES-2SUVM-3A	SUSE Linux Enterprise Svr (1-2 CPU,Unl VM) LP; 3Y Supp Req
SLES-2SUVM-3S	SUSE Linux Enterprise Svr (1-2 CPU,Unl VM) LP; Prio 3Y SnS
SLES-2SUVM-3YR	SUSE Linux Entp Svr (1-2 CPU,Unl VM) LP; Prio SnS 24x7 - 3Y
SLES-2SUVM-5A	SUSE Linux Enterprise Svr (1-2 CPU,Unl VM) LP; 5Y Supp Req

Table 26 Operating System *(continued)*

Product ID (PID)	PID Description
SLES-2SUVM-5S	SUSE Linux Enterprise Svr (1-2 CPU,Unl VM) LP; Prio 5Y SnS
SLES-2SUVM-5YR	SUSE Linux Entp Svr (1-2 CPU,Unl VM) LP; Prio SnS 24x7 - 5Y
SLES-SAP2SUVM-1A	SLES for SAP Apps w/ HA (1-2 CPU, Unl VM) LP; 1Y Supp Reqd
SLES-SAP2SUVM-1S	SLES for SAP Apps (1-2 CPU, Unl VM) LP; Priority 1Y SnS
SLES-SAP2SUVM-1YR	SUSE for SAP Apps; (1-2 CPU,Unl VM) LP; Prio SnS 24x7 - 1Y
SLES-SAP2SUVM-3A	SLES for SAP Apps w/ HA (1-2 CPU, Unl VM) LP; 3Y Supp Reqd
SLES-SAP2SUVM-3S	SLES for SAP Apps (1-2 CPU, Unl VM) LP; Priority 3Y SnS
SLES-SAP2SUVM-3YR	SUSE for SAP Apps; (1-2 CPU,Unl VM) LP; Prio SnS 24x7 - 3Y
SLES-SAP2SUVM-5A	SLES for SAP Apps w/ HA (1-2 CPU, Unl VM) LP; 5Y Supp Reqd
SLES-SAP2SUVM-5S	SLES for SAP Apps (1-2 CPU, Unl VM) LP; Priority 5Y SnS
SLES-SAP2SUVM-5YR	SUSE for SAP Apps; (1-2 CPU,Unl VM) LP; Prio SnS 24x7 - 5Y
SLES and SAP	
SLES-SAP-2S2V-1A	SLES for SAP Apps (1-2 CPU, 1-2 VM); 1-Yr Support Reqd
SLES-SAP-2S2V-3A	SLES for SAP Apps (1-2 CPU, 1-2 VM); 3-Yr Support Reqd
SLES-SAP-2S2V-5A	SLES for SAP Apps (1-2 CPU, 1-2 VM); 5-Yr Support Reqd
SLES-SAP-2S2V-1S	SLES for SAP Apps (1-2 CPU, 1-2 VM); Priority 1-Yr SnS
SLES-SAP-2S2V-3S	SLES for SAP Apps (1-2 CPU, 1-2 VM); Priority 3-Yr SnS
SLES-SAP-2S2V-5S	SLES for SAP Apps (1-2 CPU, 1-2 VM); Priority 5-Yr SnS

Table 27 NVIDIA GPU Licenses

Product ID (PID)	PID Description
NV-VCS-1YR	NVIDIA vCompute Server Subscription - 1 GPU - 1 Year
NV-VCS-3YR	NVIDIA vCompute Server Subscription - 1 GPU - 3 Year
NV-VCS-5YR	NVIDIA vCompute Server Subscription - 1 GPU - 5 Year
NV-GRDWK-1-5S	Quadro Perpetual Lic - NVIDIA vDWS 1CCU; 5Yr SUMS Req
NV-GRDVA-1-5S	GRID Perpetual Lic - NVIDIA VDI APPs 1CCU; 5Yr SUMS Reqd
NV-GRDPC-1-5S	GRID Perpetual Lic - NVIDIA VDI PC 1CCU; 5Yr SUMS Reqd
NV-GRD-EDP-5S	EDU - Quadro Perpetual Lic - NVIDIA vDWS 1CCU; 5Yr SUMS Reqd

Table 27 NVIDIA GPU Licenses *(continued)*

Product ID (PID)	PID Description
NV-GRID-WKP-5YR	NVIDIA Quadro Production SUMS - vDWS 1CCU - 5 Year
NV-GRID-VAP-5YR	NVIDIA GRID Production SUMS - VDI Apps 1CCU - 5 Year
NV-GRID-PCP-5YR	NVIDIA GRID Production SUMS - VDI PC 1CCU - 5 Year
NV-GRID-EDP-5YR	EDU - NVIDIA Quadro vDWS Production SUMS - 1CCU - 5 Year
NV-GRID-WKS-1YR	NVIDIA Quadro SW Subscription - vDWS 1CCU - 1 Year
NV-GRID-WKS-3YR	NVIDIA Quadro SW Subscription - vDWS 1CCU - 3 Year
NV-GRID-WKS-4YR	NVIDIA Quadro SW Subscription - vDWS 1CCU - 4 Year
NV-GRID-WKS-5YR	NVIDIA Quadro SW Subscription - vDWS 1CCU - 5 Year
NV-GRID-PCS-1YR	NVIDIA GRID Software Subscription - VDI PC 1CCU - 1 Year
NV-GRID-PCS-3YR	NVIDIA GRID Software Subscription - VDI PC 1CCU - 3 Year
NV-GRID-PCS-4YR	NVIDIA GRID Software Subscription - VDI PC 1CCU - 4 Year
NV-GRID-PCS-5YR	NVIDIA GRID Software Subscription - VDI PC 1CCU - 5 Year
NV-GRID-VAS-1YR	NVIDIA GRID Software Subscription - VDI Apps 1CCU - 1 Year
NV-GRID-VAS-3YR	NVIDIA GRID Software Subscription - VDI Apps 1CCU - 3 Year
NV-GRID-VAS-4YR	NVIDIA GRID Software Subscription - VDI Apps 1CCU - 4 Year
NV-GRID-VAS-5YR	NVIDIA GRID Software Subscription - VDI Apps 1CCU - 5 Year
NV-GRID-EDS-1YR	EDU - NVIDIA Quadro vDWS SW Subscription - 1CCU - 1 Year
NV-GRID-EDS-3YR	EDU - NVIDIA Quadro vDWS SW Subscription - 1CCU - 3 Year
NV-GRID-EDS-4YR	EDU - NVIDIA Quadro vDWS SW Subscription - 1CCU - 4 Year
NV-GRID-EDS-5YR	EDU - NVIDIA Quadro vDWS SW Subscription - 1CCU - 5 Year

STEP 18 SELECT OPERATING SYSTEM MEDIA KIT

Select the optional operating system media listed in *Table 28*.

Table 28 OS Media

Product ID (PID)	PID Description
MSWS-19-ST16C-RM	Windows Server 2019 Stan (16 Cores/2 VMs) Rec Media DVD Only
MSWS-19-DC16C-RM	Windows Server 2019 DC (16Cores/Unlim VM) Rec Media DVD Only
MSWS-22-ST16C-RM	Windows Server 2022 Stan (16 Cores/2 VMs) Rec Media DVD Only
MSWS-22-DC16C-RM	Windows Server 2022 DC (16Cores/Unlim VM) Rec Media DVD Only

SUPPLEMENTAL MATERIAL

Chassis

Internal views of the C220 M6 chassis with the top cover removed are shown in *Figure 7* and *Figure 8 on page 64*.

Figure 7 C220 M6 SFF With Top Cover Off (full-height, full-width PCIe cards)

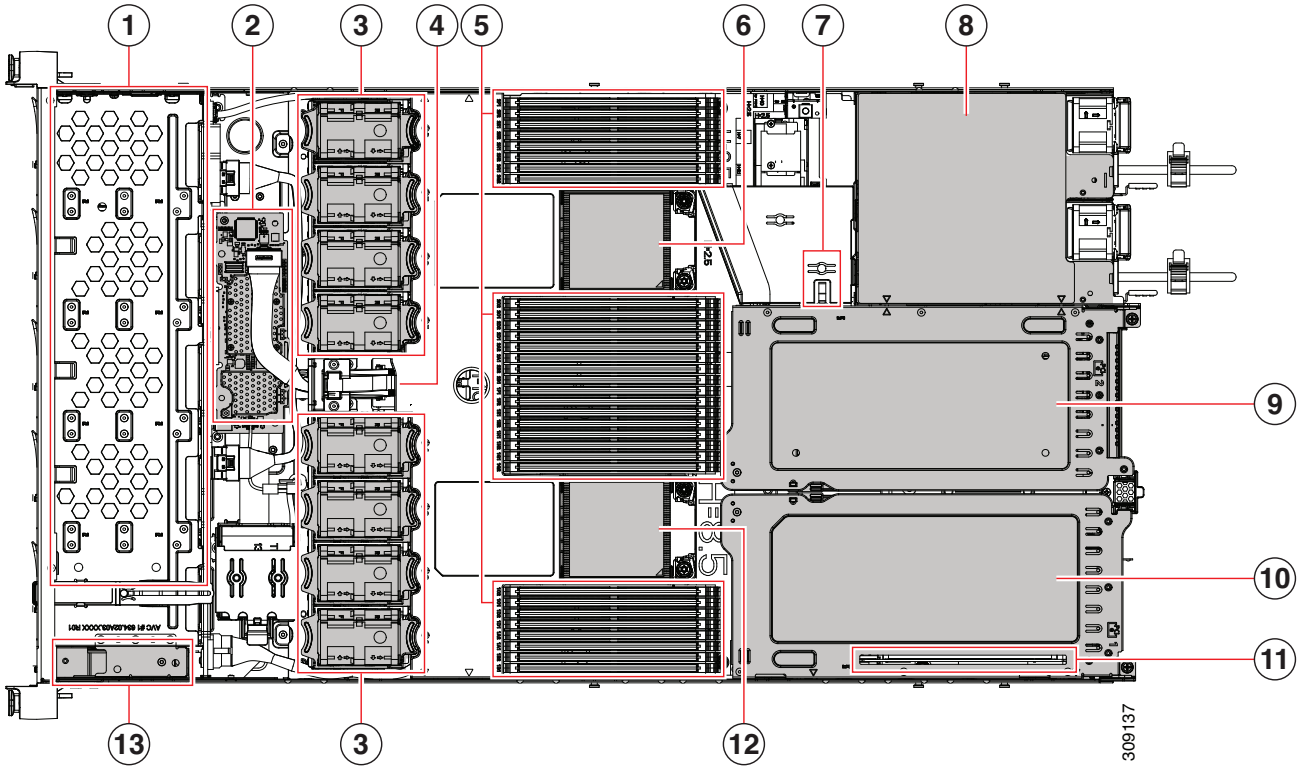

1	Front-loading drive bays	2	M6 modular RAID card (or SATA Interposer)
3	Cooling fan modules (eight) Each fan is hot-swappable	4	Supercap module mounting bracket
5	DIMM sockets on motherboard, 32 total, 16 per CPU CPUs are arranged in groups of eight sockets above the top CPU and below the bottom CPU, and 16 sockets between the CPUs.	6	Motherboard CPU2 socket
7	M.2 module connector, supporting a boot-optimized RAID controller with connectors for up to two SATA M.2 SSDs.	8	Two power supplies
9	PCIe riser 3 Accepts 1 full height, full width PCIe riser card	10	PCIe riser 1 Accepts 1 full height, full width PCIe riser card

11	Modular LOM (mLOM) card bay on chassis floor(x16 PCIe lane) Connector shown, but the card bay sits below PCIe riser 1.	12	Motherboard CPU1 socket
13	Front Panel Controller board	-	

An internal view of the C220 M6 chassis with the top cover removed is shown in ***Figure 8***.

Figure 8 C220 M6 SFF With Top Cover Off (full-height, half-width PCIe cards)

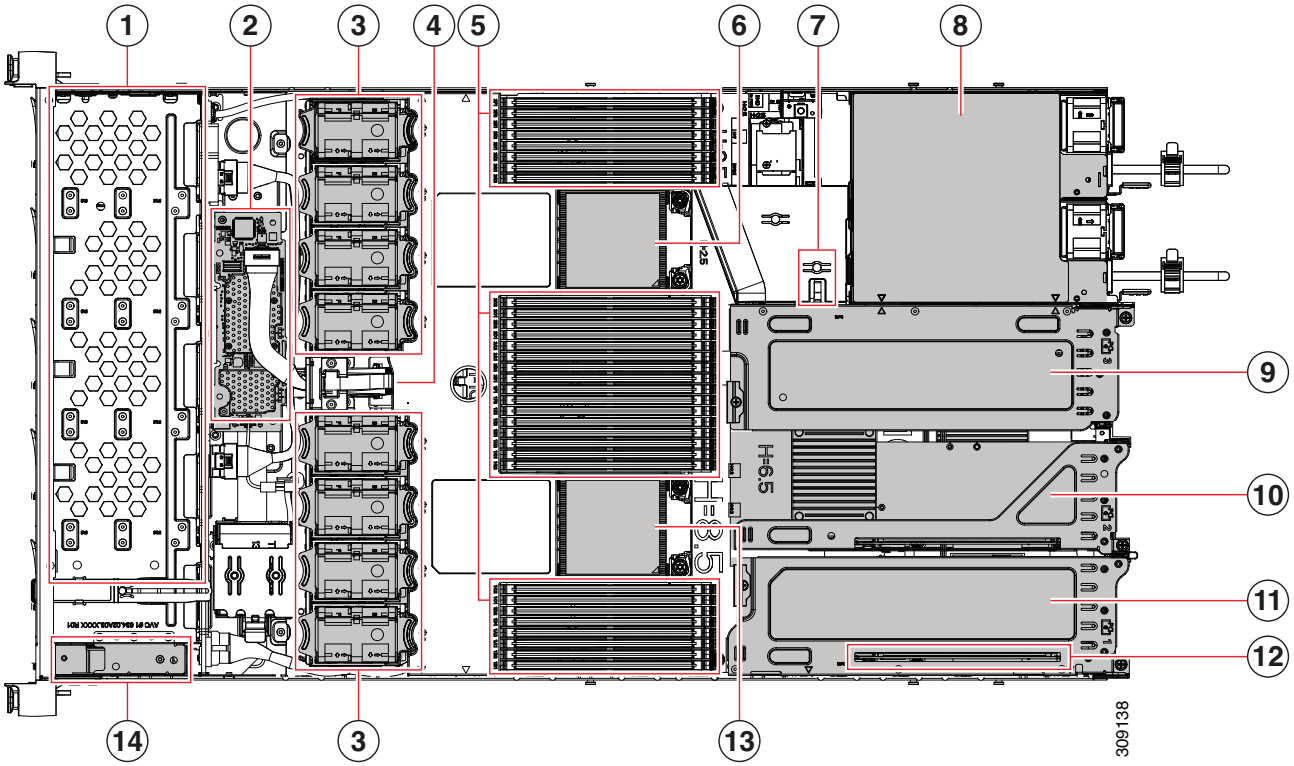

1	Front-loading drive bays	2	M6 modular RAID card (or SATA Interposer)
3	Cooling fan modules (eight) Each fan is hot-swappable	4	Supercap module mounting bracket
5	DIMM sockets on motherboard, 32 total, 16 per CPU CPUs are arranged in groups of eight sockets above the top CPU and below the bottom CPU, and 16 sockets between the CPUs.	6	Motherboard CPU2 socket
7	M.2 module connector, supporting a boot-optimized RAID controller with connectors for up to two SATA M.2 SSDs.	8	Two power supplies
9	PCIe riser 3 Accepts 1 half height, half width PCIe riser card	10	PCIe riser 2 Accepts 1 half height, half width PCIe riser card
11	PCIe riser 1 Accepts 1 half height, half width PCIe riser card	12	Modular LOM (mLOM) card bay on chassis floor(x16 PCIe lane) Connector shown, but the card bay sits below PCIe riser slot 1.
13	Motherboard CPU1 socket	14	Front Panel Controller board

Risers

Figure 9 shows the locations of the PCIe riser connectors on the C220 M6 SFF motherboard. The allowed configurations are:

- Half-height risers in riser 1 connector, riser 2 connector, and riser 3 connector, or
- Full-height risers in riser 1 connector and riser 3 connector.

See *Figure 10* and *Figure 11* for more details.

Figure 9 C220 M6 SFF Riser Connector Locations

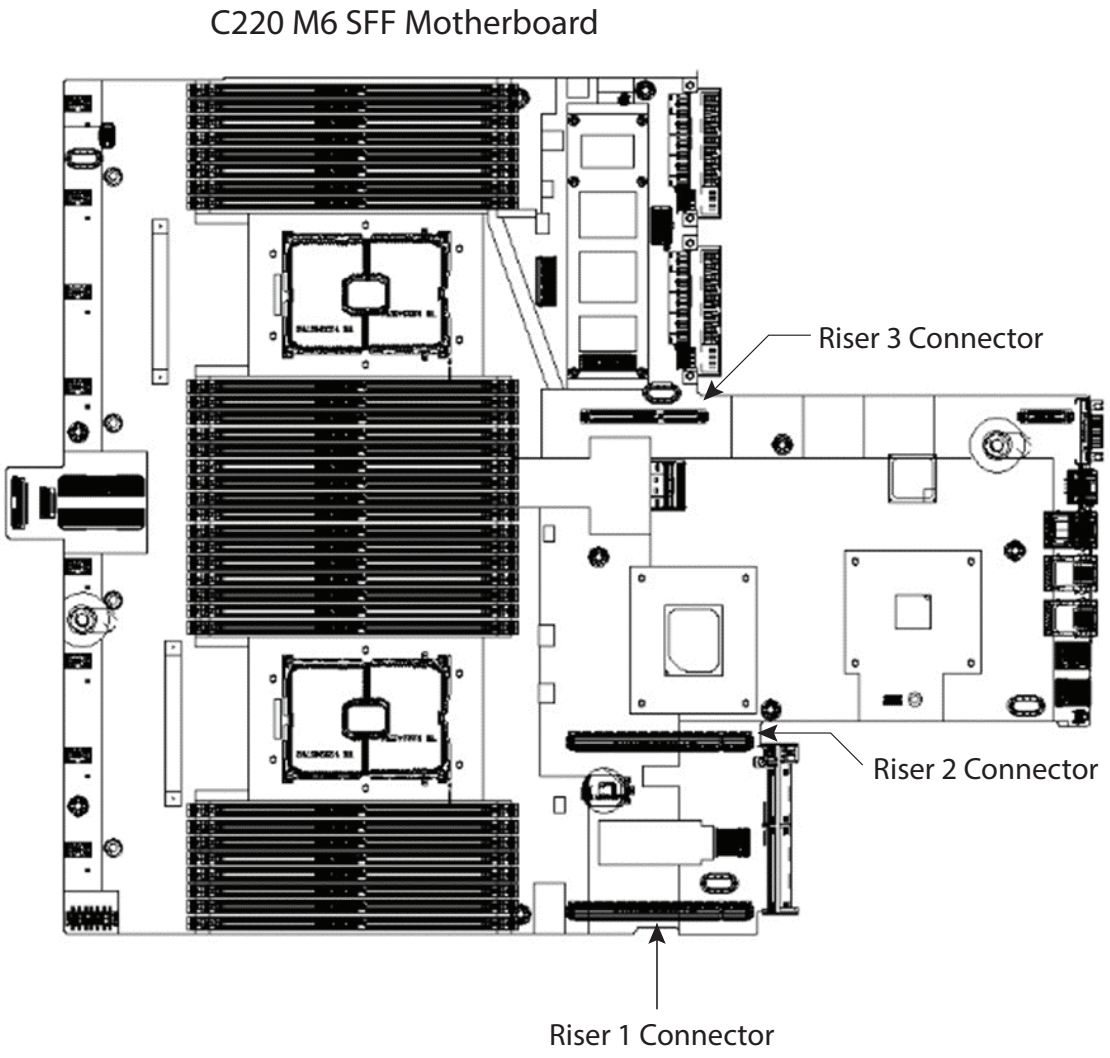

Figure 10 shows three half-height risers plugged into their respective connectors.

Figure 10 C220 M6 SFF With Three Half-Height Risers Plugged In

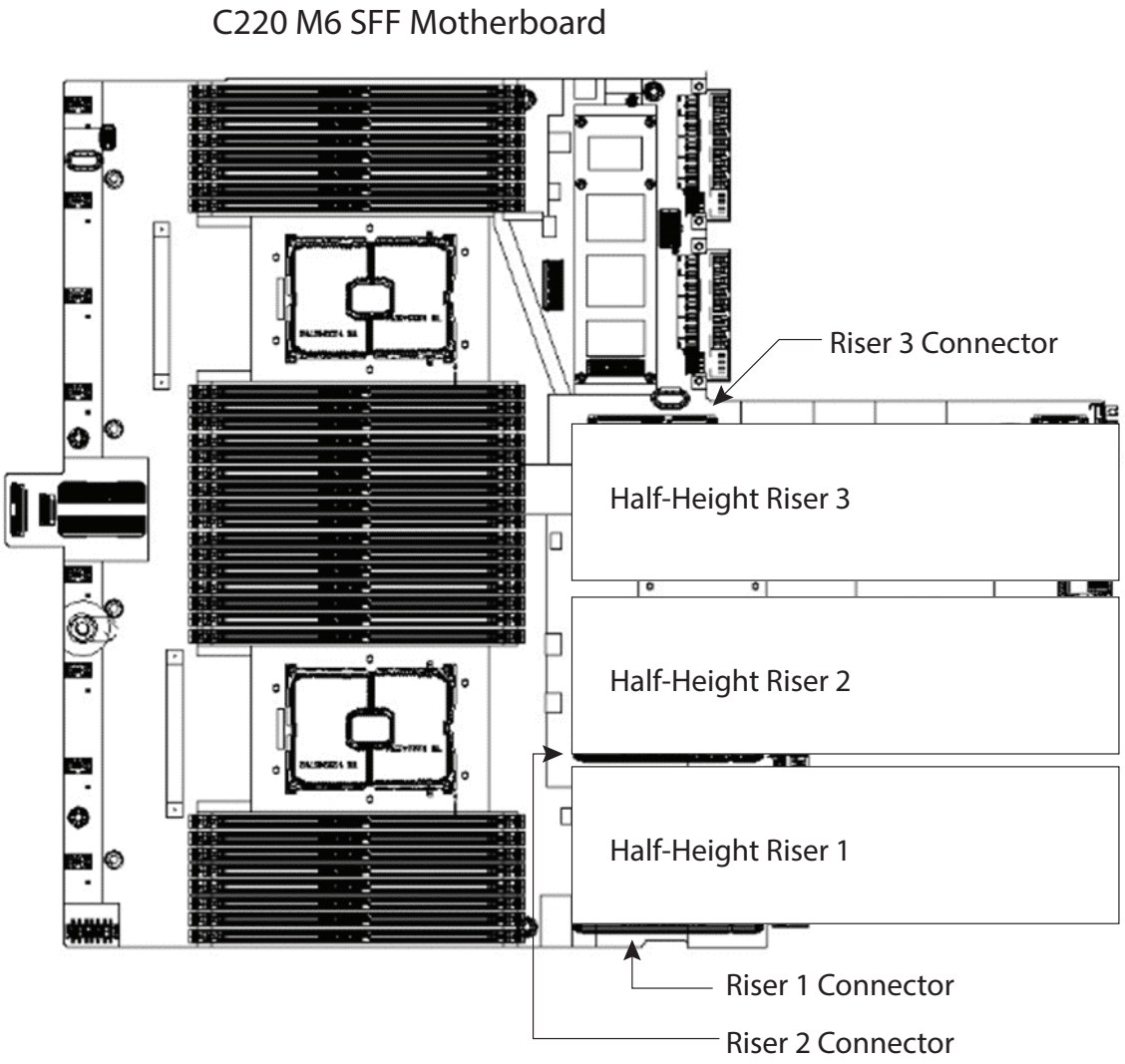

Figure 11 shows two full-height risers plugged in. Note that riser 1 is plugged into the riser 1 connector and riser 2 is plugged into the riser 3 connector. Riser 2 connector is not used.

Figure 11 C220 M6 SFF With Two Full-Height Risers Plugged In

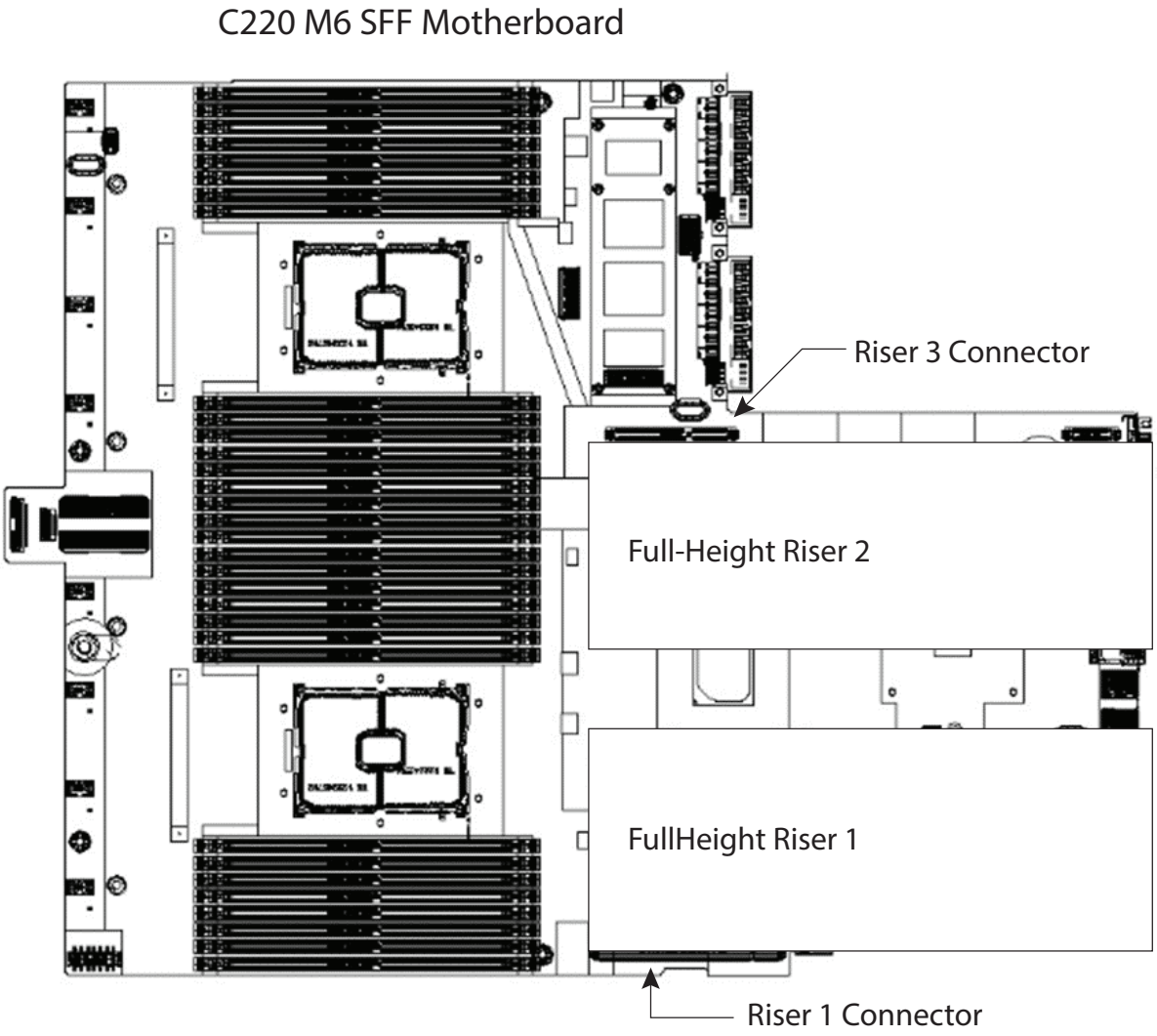

Block Diagram

A block diagram of the C220 M6S and C220 M6SN is shown in ***Figure 12***.

Figure 12 UCSC-C220-M6S/M6N Block Diagram

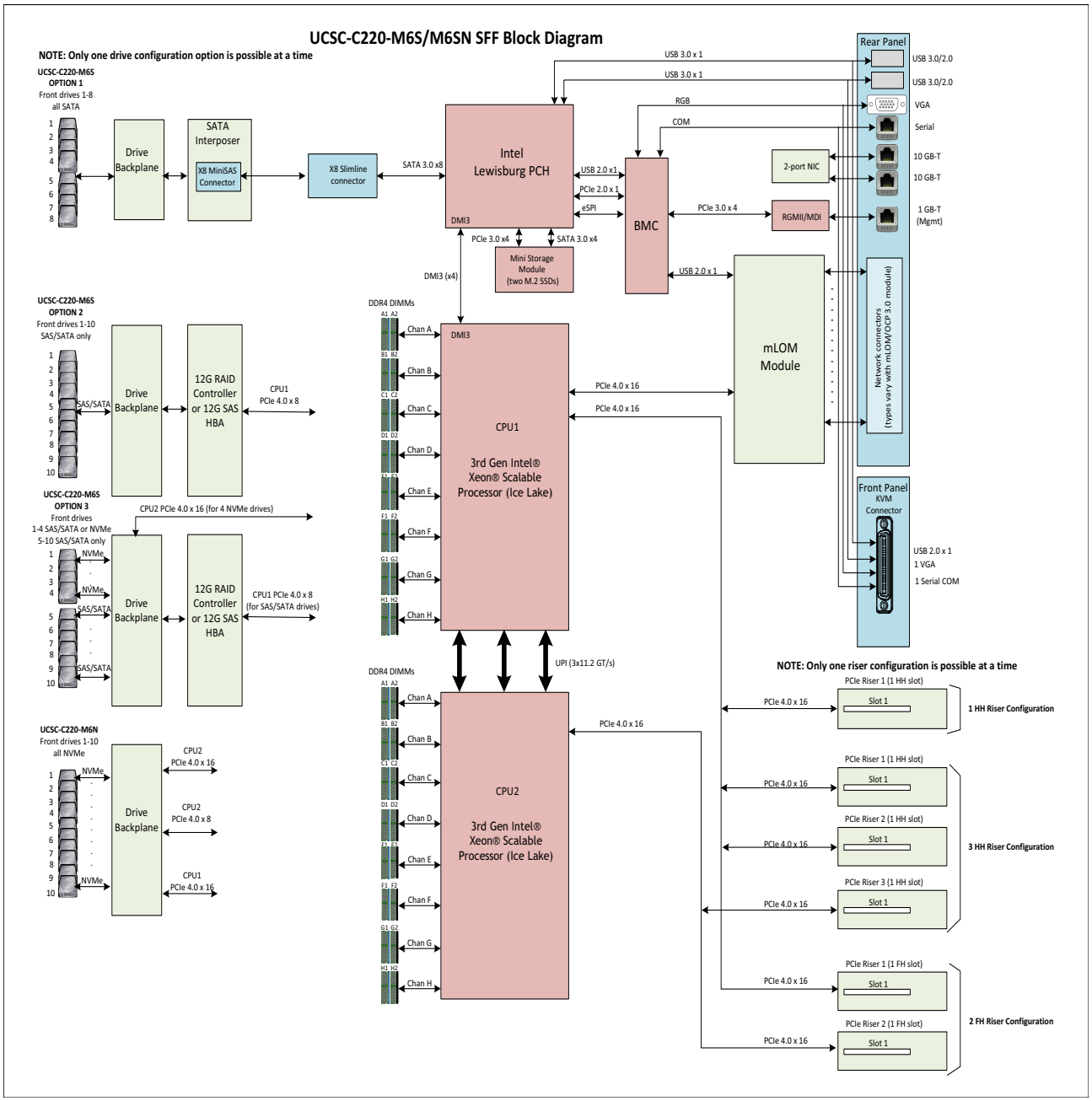

Serial Port Details

The pinout details of the rear RJ-45 serial port connector are shown in ***Figure 13***.

Figure 13 Serial Port (Female RJ-45 Connector) Pinout

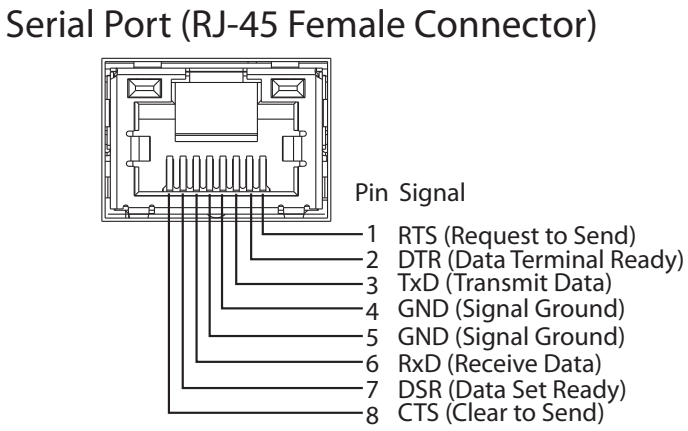

KVM Cable

The KVM cable provides a connection into the server, providing a DB9 serial connector, a VGA connector for a monitor, and dual USB ports for a keyboard and mouse. With this cable, you can create a direct connection to the operating system and the BIOS running on the server.

The KVM cable ordering information is listed in *Table 29*.

Table 29 KVM Cable

Product ID (PID)	PID Description
N20-BKVM	KVM cable for UCS Server console port

Figure 14 KVM Cable

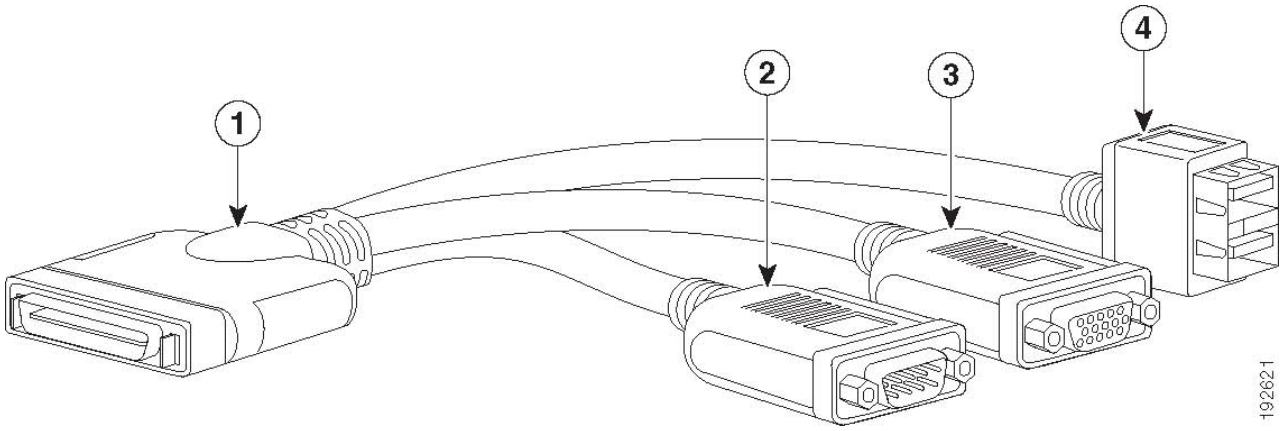

1	Connector (to server front panel)	**3**	VGA connector (for a monitor)
2	DB-9 serial connector	**4**	Two-port USB connector (for a mouse and keyboard)

Memory Support for 3rd Generation Intel® Xeon® Scalable Processors (Ice Lake)

PMem Support

The Ice Lake CPUs support two memory modes:

- App Direct Mode
- Memory Mode

App Direct Mode

PMem operates as a solid-state disk storage device. Data is saved and is non-volatile. Both DCPMM and DIMM capacities count towards the CPU capacity limit.

For example, if App Direct mode is configured and the DIMM sockets for a CPU are populated with 8 x 128 GB DRAMs (1 TB total DRAM) and 8 x 512 GB PMem (4 TB total PMem), then 5 TB total counts towards the CPU capacity limit. Follow the Intel recommended DRAM:PMem ratio for App Direct Mode.

Memory Mode

PMem operates as a 100% memory module. Data is volatile and DRAM acts as a cache for PMem. Only the PMem capacity counts towards the CPU capacity limit. This is the factory default mode.

For example, if Memory mode is configured and the DIMM sockets for a CPU are populated with 8 x 128 GB DRAMs (1 TB total DRAM) and 8 x 512 GB PMem (4 TB total PMem), then only 4 TB total (the PMem memory) counts towards the CPU capacity limit. All of the DRAM capacity (1 TB) is used as cache and does not factor into CPU capacity. The recommended Intel DRAM:PMem ratio for Memory Mode is 1:4, 1:8, or 1:16

For 3rd Generation Intel® Xeon® Scalable Processors (Ice Lake):

- DRAMs and PMem are supported
- Each CPU has 16 DIMM sockets and supports the following maximum memory capacities:
  - 2 TB using 16 x 128 GB DRAMs, or
  - 5 TB using 8 x 128 GB DRAMs and 8 x 512 GB Intel® Optane™ Persistent Memory Modules (PMem)

Only the following mixed DRAM/PMem memory configurations are supported per CPU socket:

- 4 DRAMs and 4 PMem, or 8 DRAMs and 4 PMem, or 8 DRAMs and 1 PMem, or 8 DRAMs and 8 PMem

The available DRAM capacities are 32 GB, 64 GB, or 128 GB

The available PMem capacities are 128 GB, 256 GB, or 512 GB

For further details see the following link:

https://www.cisco.com/c/dam/en/us/products/collateral/servers-unified-computing/ucs-c-series-rack-servers/memory-guide-c220-c240-b200-m6.pdf

SPARE PARTS

This section lists the upgrade and service-related parts for the UCS C220 M6 server. Some of these parts are configured with every server.

NOTE: Some spare parts you order may also require accessories for full functionality. For example, drives or RAID controllers may need accompanying cables. CPUs may need heatsinks, thermal paste, and installation tools. The spares and their accessory parts are listed in *Table 30*.

Table 30 Spare Parts

Product ID (PID)	PID Description
KVM Cable	
N20-BKVM=	KVM local IO cable for UCS servers console port
Risers	
UCSC-RIS2H-220M6=	Half-height riser 2 (controlled by CPU 1)
UCSC-RIS3H-220M6=	Half-height riser 3 (controlled by CPU 2)
UCSC-GPURKIT-C220[1]=	Kit containing a GPU mounting bracket and the following risers (risers 1 and 2):
UCSC-FBRS-C220M6=	Riser 3 blank panel
UCSC-LP-C25-1485=	Low profile bracket for VIC
CPUs **Note:** If you are ordering a second CPU, see the **CPU Accessories** section in this table for additional parts you may need to order for the second CPU.	
8000 Series Processors	
UCS-CPU-I8380=	Intel 8380 2.3GHz/270W 40C/60MB DDR4 3200MHz
UCS-CPU-I8368=	Intel 8368 2.4GHz/270W 38C/57MB DDR4 3200MHz
UCS-CPU-I8362=	Intel 8362 2.8GHz/265W 32C/48MB DDR4 3200MHz
UCS-CPU-I8360Y=	Intel 8360Y 2.4GHz/250W 36C/54MB DDR4 3200MHz
UCS-CPU-I8358P=	Intel 8358P 2.6GHz/240W 32C/48MB DDR4 3200MHz
UCS-CPU-I8358=	Intel 8358 2.6GHz/250W 32C/48MB DDR4 3200MHz

Table 30 Spare Parts *(continued)*

Product ID (PID)	PID Description
UCS-CPU-I8352M=	Intel 8352M 2.3GHz/185W 32C/48MB DDR4 3200MHz
UCS-CPU-I8352Y=	Intel 8352Y 2.2GHz/205W 32C/48MB DDR4 3200MHz
UCS-CPU-I8352V=	Intel 8352V 2.1GHz/195W 36C/54MB DDR4 2933MHz
UCS-CPU-I8352S=	Intel 8352S 2.2GHz/205W 32C/48MB DDR4 3200MHz
UCS-CPU-I8351N[2]=	Intel 8351N 2.4GHz/225W 36C/54MB DDR4 2933MHz
6000 Series Processors	
UCS-CPU-I6354=	Intel 6354 3.0GHz/205W 18C/39MB DDR4 3200MHz
UCS-CPU-I6348=	Intel 6348 2.6GHz/235W 28C/42MB DDR4 3200MHz
UCS-CPU-I6346=	Intel 6346 3.1GHz/205W 16C/36MB DDR4 3200MHz
UCS-CPU-I6342=	Intel 6342 2.8GHz/230W 24C/36MB DDR4 3200MHz
UCS-CPU-I6338N=	Intel 6338T 2.1GHz/165W 24C/36MB DDR4 3200MHz
UCS-CPU-I6338T=	Intel 6338N 2.2GHz/185W 32C/48MB DDR4 2667MHz
UCS-CPU-I6338=	Intel 6338 2.0GHz/205W 32C/48MB DDR4 3200MHz
UCS-CPU-I6336Y=	Intel 6336Y 2.4GHz/185W 24C/36MB DDR4 3200MHz
UCS-CPU-I6334=	Intel 6334 3.6GHz/165W 8C/18MB DDR4 3200MHz
UCS-CPU-I6330N=	Intel 6330N 2.2GHz/165W 28C/42MB DDR4 2667MHz
UCS-CPU-I6330=	Intel 6330 2.0GHz/205W 28C/42MB DDR4 2933MHz
UCS-CPU-I6326=	Intel 6326 2.9GHz/185W 16C/24MB DDR4 3200MHz
UCS-CPU-I6314U=[3]	Intel 6314U 2.3GHz/205W 32C/48MB DDR4 3200MHz
UCS-CPU-I6312U[4]=	Intel 6312U 2.4GHz/185W 24C/36MB DDR4 3200MHz
5000 Series Processors	
UCS-CPU-I5320T=	Intel 5320T 2.3GHz/150W 20C/30MB DDR4 2933MHz
UCS-CPU-I5320=	Intel 5320 2.2GHz/185W 26C/39MB DDR4 2933MHz
UCS-CPU-I5318N=	Intel 5318Y 2.1GHz/165W 24C/36MB DDR4 2933MHz
UCS-CPU-I5318S=	Intel 5318S 2.1GHz/165W 24C/36MB DDR4 2933MHz
UCS-CPU-I5318Y=	Intel 5318N 2.1GHz/150W 24C/36MB DDR4 2667MHz
UCS-CPU-I5317=	Intel 5317 3.0GHz/150W 12C/18MB DDR4 2933MHz
UCS-CPU-I5315Y=	Intel 5315Y 3.2GHz/150W 8C/12MB DDR4 2933MHz
4000 Series Processors	

Table 30 Spare Parts *(continued)*

Product ID (PID)	PID Description
UCS-CPU-I4316=	Intel 4316 2.3GHz/150W 20C/30MB DDR4 2667MHz
UCS-CPU-I4314=	Intel 4314 2.4GHz/135W 16C/24MB DDR4 2667MHz
UCS-CPU-I4310T=	Intel 4310T 2.3GHz/105W 10C/15MB DDR4 2667MHz
UCS-CPU-I4310=	Intel 4310 2.1GHz/120W 12C/18MB DDR4 2667MHz
UCS-CPU-I4309Y=	Intel 4309Y 2.8GHz/105W 8C/12MB DDR4 2667MHz
CPU Accessories	
UCS-CPU-TIM= **Note:** This part is included with the purchase of spare CPU.Can be ordered separately.	Single CPU thermal interface material syringe for M5 server HS seal[5]
UCS-M6-CPU-CAR= **Note:** This part is included with the purchase of spare CPU.Can be ordered separately.	Spare CPU Carrier for M6
UCSX-HSCK= **Note:** This part is included with the purchase of spare CPU.Can be ordered separately.	UCS CPU/Heatsink Cleaning Kit, for up to 4 CPU/heatsink sets
UCS-CPUAT= **Note:** This part is included with the purchase of spare CPU.Can be ordered separately.	CPU Assembly Tool for Servers
UCSC-HSHP-240M6= **Note:** Order this Heatsink, if you are adding additional CPU/spare CPU	Heatsink for 2U SFF M6 PCIe SKU

Table 30 Spare Parts *(continued)*

Product ID (PID)	PID Description
UCSC-FAN-C220M6=	C240M6 2U Fan
Memory	
UCS-MR-X16G1RW=	16 GB RDIMM SRx4 3200 (8Gb)
UCS-MR-X32G2RW=	32 GB RDIMM DRx4 3200 (8Gb)
UCS-MR-X32G1RW=	32 GB RDIMM SRx4 3200 (16Gb
UCS-MR-X64G2RW=	64 GB RDIMM DRx4 3200 (16Gb)
UCS-ML-128G4RW=	128 GB LRDIMM QRx4 3200 (16Gb)
Intel® Optane™ Persistent Memory (PMem)	
UCS-MP-128GS-B0=	Intel® Optane™ Persistent Memory, 128GB, 3200 MHz
UCS-MP-256GS-B0=	Intel® Optane™ Persistent Memory, 256 GB, 3200 MHz
UCS-MP-512GS-B0=	Intel® Optane™ Persistent Memory, 512 GB, 3200 MHz
DIMM Blank	
UCS-DIMM-BLK=	UCS DIMM Blank
HDDs **Note:** When ordering additional SAS/SATA or NVMe front or rear drives, you may need to order a cable to connect from the drive to the motherboard. See the **Drive Cables** section in this table.	
HDDs (15K RPM)	
UCS-HD900G15K12N=	900 GB 12G SAS 15K RPM SFF HDD
UCS-HD300G15K12N=	300 GB 12G SAS 15K RPM SFF HDD
UCS-HD600G15K12N=	600 GB 12G SAS 15K RPM SFF HDD
HDDs (10K RPM)	
UCS-HD300G10K12N=	300 GB 12G SAS 10K RPM SFF HDD
UCS-HD600G10K12N=	600 GB 12G SAS 10K RPM SFF HDD
UCS-HD12TB10K12N=	1.2 TB 12G SAS 10K RPM SFF HDD
UCS-HD18TB10K4KN=	1.8 TB 12G SAS 10K RPM SFF HDD (4K)
UCS-HD24TB10K4KN	2.4 TB 12G SAS 10K RPM SFF HDD (4K)
Enterprise Performance SAS/SATA SSDs (High endurance, supports up to 10X or 3X DWPD (drive writes per day))	
UCS-SD19T63X-EP=	1.9 TB 2.5in Enterprise performance 6GSATA SSD(3X endurance)

Table 30 Spare Parts *(continued)*

Product ID (PID)	PID Description
UCS-SD960G63X-EP=	960 GB 2.5in Enterprise performance 6GSATA SSD(3X endurance)
UCS-SD480G63X-EP=	480 GB 2.5in Enterprise Performance 6GSATA SSD(3X endurance)
UCS-SD19TBM3X-EP=	1.9TB 2.5in Enterprise performance 6GSATA SSD(3X endurance)
UCS-SD960GBM3X-EP=	960GB 2.5in Enterprise performance 6GSATA SSD(3X endurance)
UCS-SD480GBM3X-EP=	480GB 2.5in Enterprise Performance 6GSATA SSD(3X endurance)
UCS-SD800GK3X-EP=	800 GB 2.5in Enterprise Performance 12G SAS SSD(3X endurance)
UCS-SD16TK3X-EP=	1.6 TB 2.5in Enterprise Performance 12G SAS SSD(3X endurance)
UCS-SD38T63X-EP=	3.8TB 2.5in Enter Perf 6G SATA Intel SSD (3X)
UCS-SD32TKA3X-EP=	3.2TB 2.5in Enter Perf 12G SAS Kioxia G2 SSD (3X)
UCS-SD16TKA3X-EP=	1.6TB 2.5in Enterprise Performance 12G SAS SSD(3X endurance)
UCS-SD800GS3X-EP=	800GB 2.5in Enter Perf 12G SAS Seagate SSD (3X)
UCS-SD16TS3X-EP=	1.6TB 2.5in Enter Perf 12G SAS Seagate SSD (3X)
UCS-SD32TS3X-EP=	3.2TB 2.5in Enter Perf 12G SAS Seagate SSD (3X)
Enterprise Value SAS/SATA SSDs (Low endurance, supports up to 1X DWPD (drive writes per day))	
UCS-SD38T6I1X-EV=	3.8 TB 2.5 inch Enterprise Value 6G SATA SSD
UCS-SD960G6I1X-EV=	960 GB 2.5 inch Enterprise Value 6G SATA SSD
UCS-SD480G6I1X-EV=	480 GB 2.5 inch Enterprise Value 6G SATA SSD
UCS-SD19T61X-EV=	1.9 TB 2.5 inch Enterprise Value 6G SATA SSD
UCS-SD38T61X-EV=	3.8 TB 2.5 inch Enterprise Value 6G SATA SSD
UCS-SD120GM1X-EV=	120 GB 2.5 inch Enterprise Value 6G SATA SSD
UCS-SD960GK1X-EV=	960 GB 2.5 inch Enterprise Value 12G SAS SSD
UCS-SD19TK1X-EV=	1.9 TB 2.5 inch Enterprise Value 12G SAS SSD
UCS-SD19TM1X-EV=	1.9TB 2.5in Enter Value 6G SATA Micron G1 SSD
UCS-SD15TKA1X-EV=	15.3TB 2.5in Enter Value 12G SAS Kioxia G2 SSD
UCS-SD76TKA1X-EV=	7.6TB 2.5 inch Enterprise Value 12G SAS SSD
UCS-SD38TKA1X-EV=	3.8TB 2.5 inch Enterprise Value 12G SAS SSD
UCS-SD19TKA1X-EV=	1.9TB 2.5 inch Enterprise Value 12G SAS SSD
UCS-SD960G6S1X-EV=	960GB 2.5 inch Enterprise Value 6G SATA SSD
UCS-SD19T6S1X-EV=	1.9TB 2.5 inch Enterprise Value 6G SATA SSD

Table 30 Spare Parts *(continued)*

Product ID (PID)	PID Description
UCS-SD38T6S1X-EV=	3.8TB 2.5 inch Enterprise Value 6G SATA SSD
UCS-SD76T6S1X-EV=	7.6TB 2.5 inch Enterprise Value 6G SATA SSD
UCS-SD240GBM1X-EV=	240GB 2.5 inch Enterprise Value 6G SATA SSD
UCS-SD480GBM1X-EV=	480 GB 2.5 inch Enterprise Value 6G SATA SSD
UCS-SD19TBM1X-EV=	1.9TB 2.5 inch Enterprise Value 6G SATA SSD
Self-Encrypted Drives (SED)	
UCS-HD18T10NK9=	1.8TB 12G SAS 10K RPM SFF HDD (4K format, SED)
UCS-HD24T10NK9=	2.4TB 10k rpm 4k SED HDD
UCS-HD12T10NK9=	1.2TB 12G SAS 10K RPM SFF HDD (SED-FIPS)
UCS-HD600G15NK9=	600GB 12G SAS 15K RPM SFF HDD (SED)
UCS-SD800GBKNK9=	800GB Enterprise Performance SAS SSD (3X DWPD, SED)
UCS-SD960GBKNK9=	960GB Enterprise Value SAS SSD (1X DWPD, SED)
UCS-SD76TBKNK9=	7.6TB Enterprise value SAS SSD (1 DWPD, SED-FIPS)
UCS-SD38TBKNK9=	3.8TB Enterprise Value SAS SSD (1X DWPD, SED)
UCS-SD16TBKNK9=	1.6TB Enterprise performance SAS SSD (3X DWPD, SED)
UCS-SD76TEM2NK9=	7.6TB Enterprise value SATA SSD (1X, SED)
UCS-SD960GM2NK9=	960GB Enterprise value SATA SSD (1X , SED)
UCS-SD76TBKANK9=	7.6TB Enterprise value SAS SSD (1 DWPD, SED-FIPS)
UCS-SD38TBKANK9=	3.8TB 2.5in Enterprise value 12G SAS SSD (1DWPD, SED-FIPS)
UCS-SD16TBKANK9=	1.6TB 2.5in Enter Perf 12G SAS Kioxia G2 SSD (3X SED-FIPS)
PCIe/NVMe SFF (2.5-inch) SFF drives	
UCSC-NVMEXPB-I375=	375GB 2.5in Intel® Optane™ NVMe Extreme Performance SSD
UCSC-NVMEXP-I750=	750GB 2.5in Intel® Optane™ NVMe Extreme Perf.
UCS-NVMEI4-I1920=	1.9TB 2.5in U.2 Intel P5500 NVMe High Perf Medium Endurance
UCS-NVMEI4-I1600=	1.6TB 2.5in U.2 Intel P5600 NVMe High Perf Medium Endurance
UCS-NVMEI4-I3200=	3.2TB 2.5in U.2 Intel P5600 NVMe High Perf Medium Endurance
UCS-NVMEXP-I400=	400GB 2.5in U.2 Intel P5800X Optane NVMe Extreme Perform SSD
UCS-NVMEXP-I800=	800GB 2.5in U.2Intel P5800X Optane NVMe Extreme Perform SSD
UCS-NVME4-1920=	1.9TB 2.5in U.2 15mm P5520 Hg Perf Med End NVMe

Table 30 Spare Parts *(continued)*

Product ID (PID)	PID Description
UCS-NVME4-3840=	3.8TB 2.5in U.2 15mm P5520 Hg Perf Med End NVMe
UCS-NVME4-7680=	7.6TB 2.5in U.2 15mm P5520 Hg Perf Med End NVMe
UCS-NVME4-1536=	15.3TB 2.5in U.2 15mm P5520 Hg Perf Med End NVMe
UCS-NVME4-1600=	1.6TB 2.5in U.2 15mm P5620 Hg Perf Hg End NVMe (3X)
UCS-NVME4-3200=	3.2TB 2.5in U.2 15mm P5620 Hg Perf Hg End NVMe (3X)
UCS-NVME4-6400=	6.4TB 2.5in U.2 15mm P5620 Hg Perf Hg End NVMe (3X)
UCS-NVMEQ-1536=	15.3TB 2.5in U.2 15mm P5316 Hg Perf Low End NVMe
UCS-NVMEM6-W3200=	3.2TB 2.5in U.2 WD SN840 NVMe Extreme Perf. High Endurance
UCS-NVMEM6-W7680 =	7.6TB 2.5in U.2 WD SN840 NVMe Extreme Perf. Value Endurance
UCS-NVMEM6-W15300=	15.3TB 2.5in U.2 WD SN840 NVMe Extreme Perf. Value Endurance
UCS-NVMEG4-M960=	960GB 2.5in U.3 Micron P7450 NVMe High Perf Medium Endurance
UCS-NVMEG4-M1920=	1.9TB 2.5in U.3 Micron P7450 NVMe High Perf Medium Endurance
UCS-NVMEG4-M3840=	3.8TB 2.5in U.3 Micron P7450 NVMe High Perf Medium Endurance
UCS-NVMEG4-M7680=	7.6TB 2.5in U.3 Micron P7450 NVMe High Perf Medium Endurance
UCS-NVMEG4-M1536=	15.3TB 2.5in U.3 MicronP7450 NVMe High Perf Medium Endurance
UCS-NVMEG4-M1600=	1.6TB 2.5in U.3 Micron P7450 NVMe High Perf High Endurance
UCS-NVMEG4-M3200=	3.2TB 2.5in U.3 Micron P7450 NVMe High Perf High Endurance
UCS-NVMEG4-M6400=	6.4TB 2.5in U.3 Micron P7450 NVMe High Perf High Endurance
Drive Cables	
CBL-SATA-C220M6=  **Note:** Order this cable if you are adding a front SAS/SATA drive.	SATA cable C220M6 (1U)
CBL-FNVME-220M6=  **Note:** Order this cable set if you are adding a front NVMe drive	C220M6 1U x4 Front NVMe cable
Drive Blanking Panel	
UCSC-BBLKD-S2	C-Series M5 SFF drive blanking panel

Table 30 Spare Parts *(continued)*

Product ID (PID)	PID Description
M.2 SATA SSDs **Note:** UCS-M2-HWRAID is required when selecting the M.2 SATA drives.	
UCS-M2-I240GB=	240GB SATA M.2 SSD
UCS-M2-I480GB=	480GB SATA M.2 SSD
UCS-M2-240G=	240GB SATA M.2
UCS-M2-480G=	480GB M.2 SATA SSD
UCS-M2-960G=	960GB SATA M.2
UCS-M2-HWRAID=	Cisco Boot optimized M.2 RAID controller (holds up to two M.2 SATA SSDs)
RAID Controller	
UCSC-SAS-220M6=	Cisco 12G SAS HBA
UCSC-RAID-220M6= **Note:** Supercap (UCSC-SCAP-M6=), Cable (CBL-SCAP-C220M6=) included when RAID card is ordered as a spare	Cisco 12G SAS RAID controller
RAID Controller Accessories	
CBL-SAS-C220M6=	C220M6 SAS cable (1U)
UCS-SCAP-M6=	M6 Supercap for write cache backup
CBL-SCAP-C220M6=	C220M6 Super Cap cable
Modular LAN on Motherboard (mLOM)	
UCSC-M-V25-04=	Cisco UCS VIC 1467 quad port 10/25G SFP28 mLOM
UCSC-M-V100-04=	Cisco UCS VIC 1477 dual port 40/100G QSFP28 mLOM
UCSC-M-V5Q50G=	Cisco UCS VIC 15428 quad port 10/25/50G MLOM
UCSC-M-V5D200G=	Cisco UCS VIC 15238 dual port 40/100/200G MLOM
UCSC-M-V5Q50GV2=	Cisco UCS VIC 15427 Quad Port CNA MLOM with Secure Boot
UCSC-M-V5D200GV2=	VIC 15237, MLOM, 2x40/100/200G for Rack
OCP	
UCSC-O-N6CD100GF=	Cisco-NVDA MCX623436AC-CDAB CX6Dx 2x100G QSFP56 x16 OCP NIC

Table 30 Spare Parts *(continued)*

Product ID (PID)	PID Description
UCSC-O-N6CD25GF=	Cisco-NVDA MCX631432AC-ADAB CX6Lx 2x25G SFP28 x8 OCP NIC
Virtual Interface Card (VICs)	
UCSC-PCIE-C100-04=	Cisco UCS VIC 1495 Dual Port 40/100G QSFP28 CNA PCIe
UCSC-PCIE-C25Q-04=	Cisco UCS VIC 1455 quad port 10/25G SFP28 PCIe
Network Interface Cards (NICs)	
1 Gb NICs	
UCSC-PCIE-IRJ45=	Intel i350 quad-port 1G copper PCIe
10 Gb NICs	
UCSC-PCIE-ID10GF=	Intel X710-DA2 Dual Port 10Gb SFP+ NIC
UCSC-PCIE-IQ10GF=	Intel X710 quad-port 10G SFP+ NIC
UCSC-P-ID10GC=	Cisco-Intel X710T2LG 2x10 GbE RJ45 PCIe NIC
UCSC-P-N6D25GF=	Cisco-NVDA MCX631102AS-ADAT CX6Lx 2x25GbE SFP28 x8 PCIe NIC
25 Gb NICs	
UCSC-P-I8D25GF=	Cisco-Intel E810XXVDA2 2x25/10 GbE SFP28 PCIe NIC
UCSC-P-M5D25GF=	Mellanox MCX512A-ACAT dual port 10/25G SFP28 NIC
UCSC-P-I8Q25GF=	Cisco-Intel E810XXVDA4L 4x25/10 GbE SFP28 PCIe NIC
UCSC-P-N6D25GF=	Cisco-NVDA MCX631102AS-ADAT CX6Lx 2x25GbE SFP28 x8 PCIe NIC
40 Gb NICs	
UCSC-PCIE-ID40GF	Intel XL710 dual-port 40G QSFP+ NIC
100 Gb NICs	
UCSC-P-M5D100GF=	Mellanox CX-5 MCX516A-CDAT 2x100GbE QSFP PCIe NIC
UCSC-P-M6DD100GF=	Cisco-MLNX MCX623106AS-CDAT 2x100GbE QSFP56 PCIe NIC
UCSC-P-M6CD100GF=	Cisco-MLNX MCX623106AC-CDAT 2x100GbE QSFP56 PCIe NIC (with Crypto)
UCSC-P-I8D100GF=	Cisco-Intel E810CQDA2 2x100 GbE QSFP28 PCIe NIC
UCSC-P-I8S100GF=	Cisco-Intel E810CQDA1 1x100 GbE QSFP28 PCIe NIC
Host Bus Adapters (HBAs)	
UCSC-P-IQAT8970=	Cisco-Intel 8970 QAT Offload PCIe Adapter
UCSC-P-Q6D32GF=	Cisco-QLogic QLE2772 2x32GFC Gen 6 Enhanced PCIe HBA

Table 30 Spare Parts *(continued)*

Product ID (PID)	PID Description
UCSC-P-B7D32GF=	Cisco-Emulex LPe35002-M2-2x32GFC Gen 7 PCIe HBA
UCSC-PCIE-QD16GF=	Qlogic QLE2692 dual-port 16G FC HBA
UCSC-PCIE-BD16GF=	Emulex LPe31002 dual port 16G FC HBA
External Storage HBA	
UCSC-9500-8E=	9500 Series PCIe Gen 4.0 Tri-Mode Storage HBA 12Gb/s SAS/SATA/PCIe (NVMe)
SATA Interposer	
UCSC-SATAIN-220M6=	SATA Interposer (for control of up to 8 SATA-only drives using AHCI)
GPU PCIe Cards **Note:** If you are adding a GPU, you may need the NVIDIA license. See the **NVIDIA GPU Licenses** section of this table.	
UCSC-GPU-T4-16=	NVIDIA T4 PCIE 75W 16GB
NVIDIA GPU Licenses	
NV-VCS-1YR	NVIDIA vCompute Server Subscription - 1 GPU - 1 Year
NV-VCS-3YR	NVIDIA vCompute Server Subscription - 1 GPU - 3 Year
NV-VCS-5YR	NVIDIA vCompute Server Subscription - 1 GPU - 5 Year
NV-VCS-R-1Y=	Renew NVIDIA vCompute Server Subscription - 1 GPU - 1 Year
NV-VCS-R-3Y=	Renew NVIDIA vCompute Server Subscription - 1 GPU - 3 Year
NV-VCS-R-5Y=	Renew NVIDIA vCompute Server Subscription - 1 GPU - 5 Year
NV-GRDWK-1-5S=	Quadro Perpetual Lic - NVIDIA vDWS 1CCU; 5Yr SUMS Req
NV-GRDVA-1-5S=	GRID Perpetual Lic - NVIDIA VDI APPs 1CCU; 5Yr SUMS Reqd
NV-GRDPC-1-5S=	GRID Perpetual Lic - NVIDIA VDI PC 1CCU; 5Yr SUMS Reqd
NV-GRD-EDP-5S=	EDU - Quadro Perpetual Lic - NVIDIA vDWS 1CCU; 5Yr SUMS Reqd
NV-GRID-WKP-5YR=	NVIDIA Quadro Production SUMS - vDWS 1CCU - 5 Year
NV-GRID-VAP-5YR=	NVIDIA GRID Production SUMS - VDI Apps 1CCU - 5 Year
NV-GRID-PCP-5YR=	NVIDIA GRID Production SUMS - VDI PC 1CCU - 5 Year
NV-GRID-EDP-5YR=	EDU - NVIDIA Quadro vDWS Production SUMS - 1CCU - 5 Year
NV-GRID-WKS-1YR=	NVIDIA Quadro SW Subscription - vDWS 1CCU - 1 Year
NV-GRID-WKS-3YR=	NVIDIA Quadro SW Subscription - vDWS 1CCU - 3 Year

Table 30 Spare Parts *(continued)*

Product ID (PID)	PID Description
NV-GRID-WKS-4YR=	NVIDIA Quadro SW Subscription - vDWS 1CCU - 4 Year
NV-GRID-WKS-5YR=	NVIDIA Quadro SW Subscription - vDWS 1CCU - 5 Year
NV-GRID-PCS-1YR=	NVIDIA GRID Software Subscription - VDI PC 1CCU - 1 Year
NV-GRID-PCS-3YR=	NVIDIA GRID Software Subscription - VDI PC 1CCU - 3 Year
NV-GRID-PCS-4YR=	NVIDIA GRID Software Subscription - VDI PC 1CCU - 4 Year
NV-GRID-PCS-5YR=	NVIDIA GRID Software Subscription - VDI PC 1CCU - 5 Year
NV-GRID-VAS-1YR=	NVIDIA GRID Software Subscription - VDI Apps 1CCU - 1 Year
NV-GRID-VAS-3YR=	NVIDIA GRID Software Subscription - VDI Apps 1CCU - 3 Year
NV-GRID-VAS-4YR=	NVIDIA GRID Software Subscription - VDI Apps 1CCU - 4 Year
NV-GRID-VAS-5YR=	NVIDIA GRID Software Subscription - VDI Apps 1CCU - 5 Year
NV-GRID-EDS-1YR=	EDU - NVIDIA Quadro vDWS SW Subscription - 1CCU - 1 Year
NV-GRID-EDS-3YR=	EDU - NVIDIA Quadro vDWS SW Subscription - 1CCU - 3 Year
NV-GRID-EDS-4YR=	EDU - NVIDIA Quadro vDWS SW Subscription - 1CCU - 4 Year
NV-GRID-EDS-5YR=	EDU - NVIDIA Quadro vDWS SW Subscription - 1CCU - 5 Year
NV-GRID-VAP-R-4Y=	Renew NVIDIA GRID vApps SUMS 1CCU 4 Year
NV-GRID-PCP-R-4Y=	Renew NVIDIA GRID vPC SUMS 1CCU 4 Year
NV-QUAD-WKP-R-4Y=	Renew NVIDIA Quadro vDWS SUMS 1CCU 4 Year
NV-QUAD-WKPE-R-4Y=	Renew NVIDIA Quadro vDWS SUMS 1CCU EDU 4 Year
NV-QUAD-WKS-R-1Y=	Renew NVIDIA Quadro vDWS Subscr 1CCU 1 Year
NV-QUAD-WKS-R-3Y=	Renew NVIDIA Quadro vDWS Subscr 1CCU 3 Year
NV-QUAD-WKS-R-4Y=	Renew NVIDIA Quadro vDWS Subscr 1CCU 4 Year
NV-QUAD-WKS-R-5Y=	Renew NVIDIA Quadro vDWS Subscr 1CCU 5 Year
NV-QUAD-WKSE-R-1Y=	Renew NVIDIA Quadro vDWS Subscr 1CCU EDU 1 Year
NV-QUAD-WKSE-R-3Y=	Renew NVIDIA Quadro vDWS Subscr 1CCU EDU 3 Year
NV-QUAD-WKSE-R-4Y=	Renew NVIDIA Quadro vDWS Subscr 1CCU EDU 4 Year
NV-GRID-VAS-R-1Y=	Renew NVIDIA GRID vApps Subscr 1CCU 1 Year
NV-GRID-VAS-R-3Y=	Renew NVIDIA GRID vApps Subscr 1CCU 3 Year
NV-GRID-VAS-R-4Y=	Renew NVIDIA GRID vApps Subscr 1CCU 4 Year
NV-GRID-VAS-R-5Y=	Renew NVIDIA GRID vApps Subscr 1CCU 5 Year

Table 30 Spare Parts *(continued)*

Product ID (PID)	PID Description
NV-GRID-PCS-R-1Y=	Renew NVIDIA GRID vPC Subscr 1CCU 1 Year
NV-GRID-PCS-R-3Y=	Renew NVIDIA GRID vPC Subscr 1CCU 3 Year
NV-GRID-PCS-R-4Y=	Renew NVIDIA GRID vPC Subscr 1CCU 4 Year
NV-GRID-PCS-R-5Y=	Renew NVIDIA GRID vPC Subscr 1CCU 5 Year
NV-QUAD-WKP-R-1Y=	Renew NVIDIA Quadro vDWS SUMS 1CCU 1 Year
NV-QUAD-WKP-R-3Y=	Renew NVIDIA Quadro vDWS SUMS 1CCU 3 Year
NV-QUAD-WKP-R-5Y=	Renew NVIDIA Quadro vDWS SUMS 1CCU 5 Year
NV-QUAD-WKPE-R-1Y=	Renew NVIDIA Quadro vDWS SUMS 1CCU EDU 1 Year
NV-QUAD-WKPE-R-3Y=	Renew NVIDIA Quadro vDWS SUMS 1CCU EDU 3 Year
NV-QUAD-WKPE-R-5Y=	Renew NVIDIA Quadro vDWS SUMS 1CCU EDU 5 Year
NV-GRID-VAP-R-1Y=	Renew NVIDIA GRID vApps SUMS 1CCU 1 Year
NV-GRID-VAP-R-3Y=	Renew NVIDIA GRID vApps SUMS 1CCU 3 Year
NV-GRID-VAP-R-5Y=	Renew NVIDIA GRID vApps SUMS 1CCU 5 Year
NV-GRID-PCP-R-1Y=	Renew NVIDIA GRID vPC SUMS 1CCU 1 Year
NV-GRID-PCP-R-3Y=	Renew NVIDIA GRID vPC SUMS 1CCU 3 Year
NV-GRID-PCP-R-5Y=	Renew NVIDIA GRID vPC SUMS 1CCU 5 Year
NV-GRD-VA2WKP-5S=	Upgrade NVIDIA VDI APPs to Quadro vDWS 1CCU; 5Yr SUMS Reqd
NV-GRD-VA2PCP-5S=	Upgrade NVIDIA VDI APPs to vPC 1CCU; 5Yr SUMS Reqd
NV-GRD-VA2WKPE-5S=	Upgrade NVIDIA VDI to Quadro vDWS 1CCU; 5Yr SUMS Reqd
NV-GRD-PC2WKP-5S=	Upgrade NVIDIA vPC to Quadro vDWS 1CCU; 5Yr SUMS Reqd
NV-GRD-PC2WKPE-5S=	Upgrade NVIDIA vPC to Quadro vDWS 1CCU; 5Yr SUMS Reqd
Power Supplies	
UCSC-PSU1-1050W=	UCS 1050W AC PSU Platinum (Not EU/UK Lot 9 Compliant)
UCSC-PSUV2-1050DC=	Cisco UCS 1050W -48V DC Power Supply for Rack Server Requires cable CAB-48DC-40A-8AWG
UCSC-PSU1-1200W=	1200W Titanium power supply for C-Series Servers
UCSC-PSU1-1600W=	UCS 1600W AC PSU Platinum (Not EU/UK Lot 9 Compliant)
UCSC-PSU1-2300W[6]=	2300W Power supply for C-series servers **Titanium**
PSU (Input Low Line 110VAC)	

Table 30 Spare Parts *(continued)*

Product ID (PID)	PID Description
UCSC-PSU1-1050W=	UCS 1050W AC PSU Platinum (Not EU/UK Lot 9 Compliant)
UCSC-PSUV2-1050DC=	Cisco UCS 1050W -48V DC Power Supply for Rack Server Requires cable CAB-48DC-40A-8AWG
UCSC-PSU1-1050ELV=	1050W AC PSU Enhanced Low Line (Not EU/UK Lot 9 Compliant) **Platinum**
UCSC-PSU1-1200W=	1200W Titanium power supply for C-Series Servers
UCSC-PSU1-1600W=	UCS 1600W AC PSU Platinum (Not EU/UK Lot 9 Compliant)
UCSC-PSU1-2300W=	2300W Power supply for C-series servers **Titanium**
UCSC-PSU-M5BLK=	Power Supply Blanking Panel for M5 servers
Power Cables	
CAB-48DC-40A-8AWG=	C-Series -48VDC PSU Power Cord, 3.5M, 3 Wire, 8AWG, 40A
CAB-N5K6A-NA=	Power Cord, 200/240V 6A, North America
CAB-AC-L620-C13=	AC Power Cord, NEMA L6-20 - C13, 2M/6.5ft
CAB-C13-CBN=	CABASY,WIRE,JUMPER CORD, 27" L, C13/C14, 10A/250V
CAB-C13-C14-2M=	CABASY,WIRE,JUMPER CORD, PWR, 2 Meter, C13/C14,10A/250V
CAB-C13-C14-AC=	CORD,PWR,JMP,IEC60320/C14,IEC6 0320/C13, 3.0M
CAB-250V-10A-AR=	Power Cord, 250V, 10A, Argentina
CAB-9K10A-AU=	Power Cord, 250VAC 10A 3112 Plug, Australia
CAB-250V-10A-CN=	AC Power Cord - 250V, 10A - PRC
CAB-9K10A-EU=	Power Cord, 250VAC 10A CEE 7/7 Plug, EU
CAB-250V-10A-ID=	Power Cord, SFS, 250V, 10A, India
CAB-250V-10A-IS=	Power Cord, SFS, 250V, 10A, Israel
CAB-9K10A-IT=	Power Cord, 250VAC 10A CEI 23-16/VII Plug, Italy
CAB-9K10A-SW=	Power Cord, 250VAC 10A MP232 Plug, Switzerland
CAB-9K10A-UK=	Power Cord, 250VAC 10A BS1363 Plug (13 A fuse), UK
CAB-9K12A-NA=	Power Cord, 125VAC 13A NEMA 5-15 Plug, North America
CAB-250V-10A-BR=	Power Cord - 250V, 10A - Brazil
CAB-C13-C14-2M-JP=	Power Cord C13-C14, 2M/6.5ft Japan PSE mark
CAB-9K10A-KOR=	Power Cord, 125VAC 13A KSC8305 Plug, Korea
CAB-ACTW=	AC Power Cord (Taiwan), C13, EL 302, 2.3M

Table 30 Spare Parts *(continued)*

Product ID (PID)	PID Description
CAB-JPN-3PIN=	Japan, 90-125VAC 12A NEMA 5-15 Plug, 2.4m
Rail Kit	
UCSC-RAIL-M6=	Ball Bearing Rail Kit for C220 and C240 M6 rack servers
UCSC-RAIL-NONE=	No rail kit option
CMA	
UCSC-CMA-C220M6=	Reversible CMA for C220 M6 ball bearing rail kit
Security	
UCSX-TPM-002C=	Trusted Platform Module 2.0 for UCS servers
UCSC-INT-SW02=	C220 and C240 M6 Chassis Intrusion Switch
Bezel	
UCSC-BZL-C220M5	C220 M5 Security Bezel
Software/Firmware	
Windows Server Recovery Media	
MSWS-19-ST16C-RM=	Windows Server 2019 Stan (16 Cores/2 VMs) Rec Media DVD Only
MSWS-19-DC16C-RM=	Windows Server 2019 DC (16Cores/Unlim VM) Rec Media DVD Only
MSWS-22-ST16C-RM=	Windows Server 2022 Stan (16 Cores/2 VMs) Rec Media DVD Only
MSWS-22-DC16C-RM=	Windows Server 2022 DC (16Cores/Unlim VM) Rec Media DVD Only
RHEL SAP	
RHEL-SAPSP-3S=	RHEL SAP Solutions Premium - 3 Years
RHEL-SAPSS-3S=	RHEL SAP Solutions Standard - 3 Years
RHEL-SAPSP-R-1S=	Renew RHEL SAP Solutions Premium - 1 Year
RHEL-SAPSS-R-1S=	Renew RHEL SAP Solutions Standard - 1 Year
RHEL-SAPSP-R-3S=	Renew RHEL SAP Solutions Premium - 3 Years
RHEL-SAPSS-R-3S=	Renew RHEL SAP Solutions Standard -3 Years
VMware vSphere	
VMW-VSP-STD-1A=	VMware vSphere 7 Std (1 CPU, 32 Core) 1-yr, Support Required
VMW-VSP-STD-3A=	VMware vSphere 7 Std (1 CPU, 32 Core) 3-yr, Support Required
VMW-VSP-STD-5A=	VMware vSphere 7 Std (1 CPU, 32 Core) 5-yr, Support Required
VMW-VSP-EPL-1A=	VMware vSphere 7 Ent Plus (1 CPU, 32 Core) 1Yr, Support Reqd

Table 30 Spare Parts *(continued)*

Product ID (PID)	PID Description
VMW-VSP-EPL-3A=	VMware vSphere 7 Ent Plus (1 CPU, 32 Core) 3Yr, Support Reqd
VMW-VSP-EPL-5A=	VMware vSphere 7 Ent Plus (1 CPU, 32 Core) 5Yr, Support Reqd
VMW-VSP-STD-1S=	VMware vSphere 7 Std (1 CPU, 32 Core), 1-yr Vmware SnS Reqd
VMW-VSP-STD-3S=	VMware vSphere 7 Std (1 CPU, 32 Core), 3-yr Vmware SnS Reqd
VMW-VSP-STD-1YR	VMware vSphere 7 Std SnS - 1 Year (reports to PID VMW-VSP-STD-1S=)
VMW-VSP-STD-3YR	VMware vSphere 7 Std SnS - 3 Year (reports to PID VMW-VSP-STD-3S=)
VMW-VSP-EPL-1S=	VMware vSphere 7 EntPlus (1 CPU 32 Core) 1Yr VMware SnS Reqd
VMW-VSP-EPL-3S=	VMware vSphere 7 EntPlus (1 CPU 32 Core) 3Yr VMware SnS Reqd
VMW-VSP-EPL-1YR	VMware vSphere 7 Enterprise Plus SnS - 1 Year (reports to PID VMW-VSP-EPL-1S=)
VMW-VSP-EPl-3YR	VMware vSphere 7 Enterprise Plus SnS - 3 Year (reports to PID VMW-VSP-EPL-3S=)
VMware vCenter	
VMW-VCS-STD-1A=	VMware vCenter 7 Server Standard, 1 yr support required
VMW-VCS-STD-3A=	VMware vCenter 7 Server Standard, 3 yr support required
VMW-VCS-STD-5A=	VMware vCenter 7 Server Standard, 5 yr support required
VMW-VCS-STD-1S=	VMware vCenter 7 Server Standard, 1-yr Vmware SnS Reqd
VMW-VCS-STD-3S=	VMware vCenter 7 Server Standard, 3-yr Vmware SnS Reqd
VMW-VCS-STD-1YR=	VMware vCenter 6 Server Standard SnS - 1 Year (reports to PID VMW-VCS-STD-1S=)
VMW-VCS-STD-3YR=	VMware vCenter 6 Server Standard SnS - 3 Year (reports to PID VMW-VCS-STD-3S=)
VMW-VCS-FND-1A=	VMware vCenter Server 7 Foundation (4 Host), 1 yr supp reqd
VMW-VCS-FND-3A=	VMware vCenter Server 7 Foundation (4 Host), 3 yr supp reqd
VMW-VCS-FND-5A=	VMware vCenter Server 7 Foundation (4 Host), 5 yr supp reqd
VMW-VCS-FND-1S=	VMware vCenter Server 7 Foundation (4 Host), 1yr VM SnS Reqd
VMW-VCS-FND-3S=	VMware vCenter Server 7 Foundation (4 Host), 3yr VM SnS Reqd
VMW-VCS-FND-1YR=	VMware vCenter Server 6 Foundation (4 Host) SnS - 1 Year (reports to PID VMW-VCS-FND-1S=)
VMW-VCS-FND-3YR=	VMware vCenter Server 6 Foundation (4 Host) SnS - 3 Year (reports to PID VMW-VCS-FND-3S=)

Table 30 Spare Parts *(continued)*

Product ID (PID)	PID Description
VMware vSphere Upgrades	
VMW-VSS2VSP-1A=	Upgrade: vSphere 7 Std to vSphere 7 Ent Plus (1 yr Supp Req)
VMW-VSS2VSP-3A=	Upgrade: vSphere 7 Std to vSphere 7 Ent Plus (1 yr Supp Req)

Notes:

1. Can be selected with quantity 1 or 2 CPUs. It is recommended that the user purchase 2 QTY of Processor to support Riser2 FH x16 Slot. Full-height Riser 1 is controlled from CPU1 and Riser 2 is controlled from CPU2.
2. The maximum number of UCS-CPU-I8351N CPUs is one
3. The maximum number of UCS-CPU-I6314U CPUs is one
4. The maximum number of UCS-CPU-I6312U CPUs is one
5. This part is included with the purchase of option or spare CPU or CPU processor kits.
6. The 2300 W power supply uses a different power connector that the rest of the power supplies, so you must use different power cables to connect it. See *Table 15 on page 45* and *Table 16 on page 48*.

Please refer to “Cisco UCS C220 M6 Server Installation and Service Guide” for installation procedures. See this link:

https://www.cisco.com/content/en/us/td/docs/unified_computing/ucs/c/hw/c220m6/install/c220m6.html

UPGRADING or REPLACING CPUs

NOTE: Before servicing any CPU, do the following:

- Decommission and power off the server.
- Slide the C220 M6 SFF server out from the rack.
- Remove the top cover.

To replace an existing CPU, follow these steps:

(1) Have the following tools and materials available for the procedure:

- T-30 Torx driver—Supplied with replacement CPU.
- #1 flat-head screwdriver—Supplied with replacement CPU.
- CPU assembly tool—Supplied with replacement CPU. Can be ordered separately as Cisco PID UCS-CPUAT=.
- Heatsink cleaning kit—Supplied with replacement CPU. Can be ordered separately as Cisco PID UCSX-HSCK=.
- Thermal interface material (TIM)—Syringe supplied with replacement CPU. Can be ordered separately as Cisco PID UCS-CPU-TIM=.

(2) Order the appropriate replacement CPU from *Table 4 on page 19*

Carefully remove and replace the CPU and heatsink in accordance with the instructions found in "Cisco UCS C220 M6 Server Installation and Service Guide," found at:
https://www.cisco.com/content/en/us/td/docs/unified_computing/ucs/c/hw/c220m6/install/c220m6.html

To add a new CPU, follow these steps:

(1) Have the following tools and materials available for the procedure:

- T-30 Torx driver—Supplied with new CPU.
- #1 flat-head screwdriver—Supplied with new CPU
- CPU assembly tool—Supplied with new CPU.Can be ordered separately as Cisco PID UCS-CPUAT=
- Thermal interface material (TIM)—Syringe supplied with replacement CPU.Can be ordered separately as Cisco PID UCS-CPU-TIM=

(2) Order the appropriate new CPU from *Table 4 on page 19*

(3) Order one heat sink for each new CPU. Order PID UCSC-HSLP-M6=.

Carefully install the CPU and heatsink in accordance with the instructions found in "Cisco UCS C220 M6 Server Installation and Service Guide," found at:

https://www.cisco.com/content/en/us/td/docs/unified_computing/ucs/c/hw/c220m6/install/c220m6.html

UPGRADING or REPLACING MEMORY

NOTE: Before servicing any DIMM or PMem, do the following:

- Decommission and power off the server.
- Remove the top cover from the server
- Slide the server out the front of the chassis.

To add or replace DIMMs or PMem, follow these steps:

Step 1 Open both DIMM connector latches.

Step 2 Press evenly on both ends of the DIMM until it clicks into place in its slot

Note: Ensure that the notch in the DIMM aligns with the slot. If the notch is misaligned, it is possible to damage the DIMM, the slot, or both.

Step 3 Press the DIMM connector latches inward slightly to seat them fully.

Step 4 Populate all slots with a DIMM or DIMM blank. A slot cannot be empty.

Figure 15 Replacing Memory

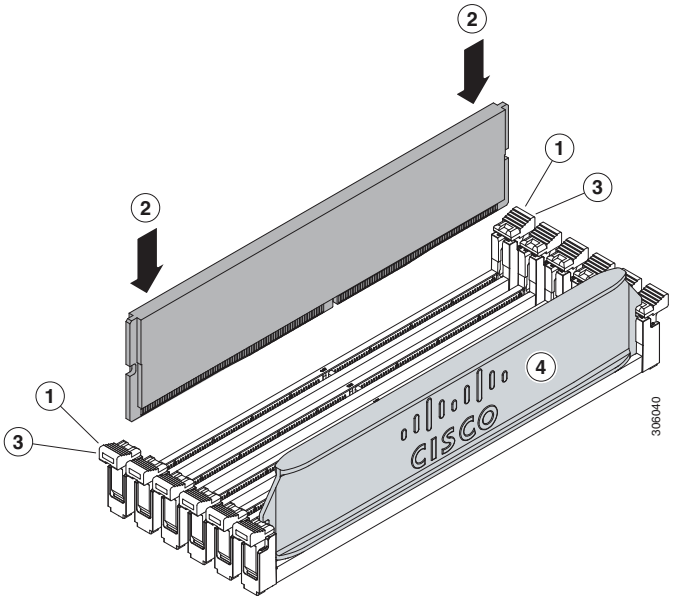

For additional details on replacing or upgrading DIMMs and PMem, see “Cisco UCS C220 M6 Server Installation and Service Guide,” found at this link:

https://www.cisco.com/content/en/us/td/docs/unified_computing/ucs/c/hw/c220m6/install/c220m6.html

DISCONTINUED EOL PRODUCTS

Below is the list of parts were previously available for this product and are no longer sold. Please refer to the EOL Bulletin Links via the Table 36 below to determine if still supported.

Table 31 EOS

Product ID	Description	EOL/EOS link
software		
NV-GRDVA-1-4S	GRID Perpetual Lic - NVIDIA VDI APPs 1CCU; 4Yr SUMS Reqd	https://www.cisco.com/c/en/us/products/collateral/servers-unified-computing/ucs-b-series-blade-servers/select-commvault-veeam-vmware-nvdia-mapr-software-resell-eol.html
NV-GRDPC-1-4	GRID Perpetual Lic - NVIDIA VDI PC 1CCU; 4Yr SUMS Reqd	https://www.cisco.com/c/en/us/products/collateral/servers-unified-computing/ucs-b-series-blade-servers/select-commvault-veeam-vmware-nvdia-mapr-software-resell-eol.html
NV-GRDWK-1-4S	Quadro Perpetual Lic - NVIDIA vDWS 1CCU; 4Yr SUMS Req	https://www.cisco.com/c/en/us/products/collateral/servers-unified-computing/ucs-b-series-blade-servers/select-commvault-veeam-vmware-nvdia-mapr-software-resell-eol.html
NV-GRD-EDP-4S	EDU - Quadro Perpetual Lic - NVIDIA vDWS 1CCU; 4Yr SUMS Reqd	https://www.cisco.com/c/en/us/products/collateral/servers-unified-computing/ucs-b-series-blade-servers/select-commvault-veeam-vmware-nvdia-mapr-software-resell-eol.html
NV-GRID-VAP-4YR	NVIDIA GRID Production SUMS - VDI Apps 1CCU - 4 Year	https://www.cisco.com/c/en/us/products/collateral/servers-unified-computing/ucs-b-series-blade-servers/select-commvault-veeam-vmware-nvdia-mapr-software-resell-eol.html
NV-GRID-PCP-4YR	NVIDIA GRID Production SUMS - VDI PC 1CCU - 4 Year	https://www.cisco.com/c/en/us/products/collateral/servers-unified-computing/ucs-b-series-blade-servers/select-commvault-veeam-vmware-nvdia-mapr-software-resell-eol.html
NV-GRID-WKP-4YR	NVIDIA Quadro Production SUMS - vDWS 1CCU - 4 Year	https://www.cisco.com/c/en/us/products/collateral/servers-unified-computing/ucs-b-series-blade-servers/select-commvault-veeam-vmware-nvdia-mapr-software-resell-eol.html
NV-GRID-EDP-4YR	EDU - NVIDIA Quadro vDWS Production SUMS - 1CCU - 4 Year	https://www.cisco.com/c/en/us/products/collateral/servers-unified-computing/ucs-b-series-blade-servers/select-commvault-veeam-vmware-nvdia-mapr-software-resell-eol.html
Operating system		
SLES-2SUV-1A	SUSE Linux Enterprise Svr (1-2 CPU,Unl VM); 1-Yr Support Req	
SLES-2SUV-1S	SUSE Linux Enterprise Svr (1-2 CPU,Unl VM); Prio 1-Yr SnS	
SLES-2SUV-3A	SUSE Linux Enterprise Svr (1-2 CPU,Unl VM); 3-Yr Support Req	
SLES-2SUV-3S	SUSE Linux Enterprise Svr (1-2 CPU,Unl VM); Prio 3-Yr SnS	
SLES-2SUV-5A	SUSE Linux Enterprise Svr (1-2 CPU,Unl VM); 5-Yr Support Req	
SLES-2SUV-5S	SUSE Linux Enterprise Svr (1-2 CPU,Unl VM); Prio 5-Yr SnS	

Table 31 EOS

SLES-SAP-2SUV-1A	SLES for SAP Apps w/ HA (1-2 CPU, Unl VM); 1-Yr Support Reqd	
SLES-SAP-2SUV-1S	SLES for SAP Apps (1-2 CPU, Unl VM); Priority 1-Yr SnS	
SLES-SAP-2SUV-3A	SLES for SAP Apps w/ HA (1-2 CPU, Unl VM); 3-Yr Support Reqd	
SLES-SAP-2SUV-3S	SLES for SAP Apps (1-2 CPU, Unl VM); Priority 3-Yr SnS	
SLES-SAP-2SUV-5A	SLES for SAP Apps w/ HA (1-2 CPU, Unl VM); 5-Yr Support Reqd	
SLES-SAP-2SUV-5S	SLES for SAP Apps (1-2 CPU, Unl VM); Priority 5-Yr SnS	
Drives		
UCS-M2-240GB	240GB M.2 SATA Micron G1 SSD	https://www.cisco.com/c/en/us/products/collateral/servers-unified-computing/ucs-c-series-rack-servers/unified-computing-accessories-eol.html
UCS-M2-960GB	960GB M.2 SATA Micron G1 SSD	https://www.cisco.com/c/en/us/products/collateral/servers-unified-computing/ucs-c-series-rack-servers/unified-computing-accessories-eol.html
UCS-NVMEI4-I3840	3.8TB 2.5in U.2 Intel P5500 NVMe High Perf Medium Endurance	https://www.cisco.com/c/en/us/products/collateral/servers-unified-computing/ucs-c-series-rack-servers/select-ucs-access-eol-15074.html
UCS-NVMEI4-I7680	7.6TB 2.5in U.2 Intel P5500 NVMe High Perf Medium Endurance	https://www.cisco.com/c/en/us/products/collateral/servers-unified-computing/ucs-c-series-rack-servers/select-ucs-access-eol-15074.html
UCS-NVMEM6-W6400	6.4TB 2.5in U.2 WD SN840 NVMe Extreme Perf. High Endurance	https://www.cisco.com/c/en/us/products/collateral/servers-unified-computing/ucs-c-series-rack-servers/unified-computing-accessories-eol.html
UCS-NVMEM6-W6400	6.4TB 2.5in U.2 WD SN840 NVMe Extreme Perf. High Endurance	https://www.cisco.com/c/en/us/products/collateral/servers-unified-computing/ucs-c-series-rack-servers/unified-computing-accessories-eol.html
UCS-SD76T61X-EV	7.6TB 2.5 inch Enterprise Value 6G SATA SSD	https://www.cisco.com/c/en/us/products/collateral/servers-unified-computing/ucs-c-series-rack-servers/select-ucs-hyperflex-accessories-eol2.html
UCS-SD76TBEM2NK9	7.6TB 2.5in Enter Value 6G SATA Micron G1 SSD (SED)	https://www.cisco.com/c/en/us/products/collateral/servers-unified-computing/ucs-c-series-rack-servers/unified-computing-accessories-eol.html
UCS-SD960GBM2NK9	960GB 2.5in Enter Value 6G SATA Micron G1 SSD (SED)	https://www.cisco.com/c/en/us/products/collateral/servers-unified-computing/ucs-c-series-rack-servers/unified-computing-accessories-eol.html
UCS-SD240GM1X-EV	240GB 2.5in Enter Value 6G SATA Micron G1 SSD	https://www.cisco.com/c/en/us/products/collateral/servers-unified-computing/ucs-c-series-rack-servers/unified-computing-accessories-eol.html
UCS-SD480GM1X-EV	480 GB 2.5in Enter Value 6G SATA Micron G1 SSD	https://www.cisco.com/c/en/us/products/collateral/servers-unified-computing/ucs-c-series-rack-servers/unified-computing-accessories-eol.html
UCS-SD76TM1X-EV	7.6TB 2.5in Enter Value 6G SATA Micron G1 SSD	https://www.cisco.com/c/en/us/products/collateral/servers-unified-computing/ucs-c-series-rack-servers/unified-computing-accessories-eol.html

Table 31 EOS

UCS-SD16TM1X-EV	1.6TB 2.5in Enter Value 6G SATA Micron G1 SSD	https://www.cisco.com/c/en/us/products/collateral/servers-unified-computing/ucs-c-series-rack-servers/unified-computing-accessories-eol.html
UCS-SD38TM1X-EV	3.8TB 2.5in Enter Value 6G SATA Micron G1 SSD	https://www.cisco.com/c/en/us/products/collateral/servers-unified-computing/ucs-c-series-rack-servers/unified-computing-accessories-eol.html
UCS-SD960G61X-EV	960GB 2.5 inch Enterprise Value 6G SATA SSD	https://www.cisco.com/c/en/us/products/collateral/servers-unified-computing/ucs-c-series-rack-servers/select-ucs-hyperflex-accessories-eol2.html
UCS-NVMEI4-I6400	6.4TB 2.5in U.2 Intel P5600 NVMe High Perf Medium Endurance	https://www.cisco.com/c/en/us/products/collateral/servers-unified-computing/ucs-b-series-blade-servers/select-ucs-accessories-eol.html
UCS-SD32TK3X-EP	3.2TB 2.5in Enter Perf 12G SAS Kioxia G1 SSD (3X)	https://www.cisco.com/c/en/us/products/collateral/servers-unified-computing/ucs-b-series-blade-servers/select-ucs-accessories-eol.html
UCS-SD38TK1X-EV	3.8TB 2.5in Enter Value 12G SAS Kioxia G1 SSD	https://www.cisco.com/c/en/us/products/collateral/servers-unified-computing/ucs-b-series-blade-servers/select-ucs-accessories-eol.html
UCS-SD76TBKNK9	7.6TB 2.5in Enter Value 12G SAS Kioxia G1 SSD (SED-FIPS)	https://www.cisco.com/c/en/us/products/collateral/servers-unified-computing/ucs-b-series-blade-servers/select-ucs-accessories-eol.html
UCS-SD76TK1X-EV	7.6TB 2.5in Enter Value 12G SAS Kioxia G1 SSD	https://www.cisco.com/c/en/us/products/collateral/servers-unified-computing/ucs-b-series-blade-servers/select-ucs-accessories-eol.html
UCS-SD15TK1X-EV	15.3TB 2.5in Enter Value 12G SAS Kioxia G1 SSD	https://www.cisco.com/c/en/us/products/collateral/servers-unified-computing/ucs-b-series-blade-servers/select-ucs-accessories-eol.html

TECHNICAL SPECIFICATIONS

Dimensions and Weight

Table 32 UCS C220 M6 Dimensions and Weight

Parameter	Value
Height	1.70 in. (4.3 cm)
Width (Not including slam latches)	16.9 in.(42.9 cm)
Width (including slam latches)	18.9 in.(48.0 cm)
Depth	30 in. (76.2 cm)
Front Clearance	3 in. (76 mm)
Side Clearance	1 in. (25 mm)
Rear Clearance	6 in. (152 mm)
Weight	
Weight with following options and no rail kit: 1 HDD, 1 CPU, 1 DIMM, and 1 1600 W power supply	22.32 lbs (10.1 kg)
Weight with following options and including rail kit: 1 HDD, 1 CPU, 1 DIMM, and 1 1600 W power supply	32.38 lbs (14.7 kg)
Weight with following options and no rail kit: 10 HDDs, 2 CPUs, 32 DIMMs, and 2 1600 W power supplies	32.38 lbs (14.7 kg)
Weight with following options and including rail kit: 10 HDDs, 2 CPUs, 32 DIMMs, and 2 1600 W power supplies	42.43 lbs (19.3 kg)

Power Specifications

The server is available with the following types of power supplies:

- 1050 W (AC) power supply (see *Table 33*).
- 1050 W V2 (DC) power supply (see *Table 34*)
- 1600 W (AC) power supply (see *Table 35*)
- 2300 W (AC) power supply (see *Table 36*)

Table 33 UCS C220 M6 SFF Power Specifications (1050 W AC power supply)

Parameter	Specification			
Input Connector	IEC320 C14			
Input Voltage Range (V rms)	100 to 240			
Maximum Allowable Input Voltage Range (V rms)	90 to 264			
Frequency Range (Hz)	50 to 60			
Maximum Allowable Frequency Range (Hz)	47 to 63			
Maximum Rated Output (W)[1]	800		1050	
Maximum Rated Standby Output (W)	36			
Nominal Input Voltage (V rms)	100	120	208	230
Nominal Input Current (A rms)	9.2	7.6	5.8	5.2
Maximum Input at Nominal Input Voltage (W)	889	889	1167	1154
Maximum Input at Nominal Input Voltage (VA)	916	916	1203	1190
Minimum Rated Efficiency (%)[2]	90	90	90	91
Minimum Rated Power Factor[2]	0.97	0.97	0.97	0.97
Maximum Inrush Current (A peak)	15			
Maximum Inrush Current (ms)	0.2			
Minimum Ride-Through Time (ms)[3]	12			

Notes:

1. Maximum rated output is limited to 800W when operating at low-line input voltage (100-127V)
2. This is the minimum rating required to achieve 80 PLUS Platinum certification, see test reports published at http://www.80plus.org/ for certified values
3. Time output voltage remains within regulation limits at 100% load, during input voltage dropout

Table 34 UCS C220 M6 SFF Power Specifications (1050 W V2 DC power supply)

Parameter	Specification
Input Connector	Molex 42820
Input Voltage Range (V rms)	-48
Maximum Allowable Input Voltage Range (V rms)	-40 to -72
Frequency Range (Hz)	NA
Maximum Allowable Frequency Range (Hz)	NA
Maximum Rated Output (W)	1050
Maximum Rated Standby Output (W)	36
Nominal Input Voltage (V rms)	-48
Nominal Input Current (A rms)	24
Maximum Input at Nominal Input Voltage (W)	1154
Maximum Input at Nominal Input Voltage (VA)	1154
Minimum Rated Efficiency (%)[1]	91
Minimum Rated Power Factor[1]	NA
Maximum Inrush Current (A peak)	15
Maximum Inrush Current (ms)	0.2
Minimum Ride-Through Time (ms)[2]	5

Notes:

1. This is the minimum rating required to achieve 80 PLUS Platinum certification, see test reports published at http://www.80plus.org/ for certified values
2. Time output voltage remains within regulation limits at 100% load, during input voltage dropout

Table 35 UCS C220 M6 1600 W (AC) Power Supply Specifications

Parameter	Specification			
Input Connector	IEC320 C14			
Input Voltage Range (V rms)	200 to 240			
Maximum Allowable Input Voltage Range (V rms)	180 to 264			
Frequency Range (Hz)	50 to 60			
Maximum Allowable Frequency Range (Hz)	47 to 63			
Maximum Rated Output (W)	1600			
Maximum Rated Standby Output (W)	36			
Nominal Input Voltage (V rms)	100	120	208	230
Nominal Input Current (A rms)	NA	NA	8.8	7.9
Maximum Input at Nominal Input Voltage (W)	NA	NA	1778	1758
Maximum Input at Nominal Input Voltage (VA)	NA	NA	1833	1813
Minimum Rated Efficiency (%)[1]	NA	NA	90	91
Minimum Rated Power Factor[2]	NA	NA	0.97	0.97
Maximum Inrush Current (A peak)	30			
Maximum Inrush Current (ms)	0.2			
Minimum Ride-Through Time (ms)[2]	12			

Notes:

1. This is the minimum rating required to achieve 80 PLUS Platinum certification, see test reports published at http://www.80plus.org/ for certified values
2. Time output voltage remains within regulation limits at 100% load, during input voltage dropout

Table 36 UCS C220 M6 2300 W (AC) Power Supply Specifications

Parameter	Specification			
Input Connector	IEC320 C20			
Input Voltage Range (Vrms)	100 to 240			
Maximum Allowable Input Voltage Range (Vrms)	90 to 264			
Frequency Range (Hz)	50 to 60			
Maximum Allowable Frequency Range (Hz)	47 to 63			
Maximum Rated Output (W)[1]	2300			
Maximum Rated Standby Output (W)	36			
Nominal Input Voltage (Vrms)	100	120	208	230
Nominal Input Current (Arms)	13	11	12	10.8
Maximum Input at Nominal Input Voltage (W)	1338	1330	2490	2480
Maximum Input at Nominal Input Voltage (VA)	1351	1343	2515	2505
Minimum Rated Efficiency (%)[2]	92	92	93	93
Minimum Rated Power Factor[2]	0.99	0.99	0.97	0.97
Maximum Inrush Current (A peak)	30			
Maximum Inrush Current (ms)	0.2			
Minimum Ride-Through Time (ms)[3]	12			

Notes:

1. Maximum rated output is limited to 1200W when operating at low-line input voltage (100-127V)
2. This is the minimum rating required to achieve 80 PLUS Titanium certification, see test reports published at http://www.80plus.org/ for certified values
3. Time output voltage remains within regulation limits at 100% load, during input voltage dropout

For configuration-specific power specifications, use the Cisco UCS Power Calculator at this URL:

http://ucspowercalc.cisco.com

Environmental Specifications

The environmental specifications for the C220 M6 server are listed in *Table 37*.

Table 37 UCS C220 M6 Environmental Specifications

Parameter	Minimum
Operating Temperature	Dry bulb temperature of 10°C to 35°C (50°F to 95°F) Maximum temperature change of 20°C (36°F) per hour (a temperature change within a specified period of time and not a rate of change) Humidity condition: Uncontrolled, not to exceed 50% RH starting condition Derate the maximum temperature by 1°C (33.8°F) per every 305 meters of altitude above 900m
Extended Operating Temperature	5°C to 40°C (41°F to 104°F) with no direct sunlight Humidity condition: Uncontrolled, not to exceed 50% RH starting condition Derate the maximum temperature by 1°C (33.8°F) per every 305 meters of altitude above 900m
Non-Operating Temperature	Dry bulb temperature of -40°C to 65°C (-40°F to 149°F)
Operating Relative Humidity	10% to 90% and 28°C (82.4°F) maximum dew-point temperature, non-condensing environment Minimum to be higher (more moisture) of -12°C (10.4°F) dew point or 8% relative humidity Maximum to be 24°C (75.2°F) dew point or 90% relative humidity
Non-Operating Relative Humidity	5% to 93% relative humidity, non-condensing, with a maximum wet bulb temperature of 28°C across the 20°C to 40°C dry bulb range.
Maximum Operating Duration	Unlimited
Operating Altitude	A maximum elevation of 3050 meters (10,006 ft)
Non-Operating Altitude	An elevation of 0 to 12,000 meters (39,370 ft)
Sound Power level, Measure A-weighted per ISO7779 LWAd (Bels) Operation at 23°C (73°F)	5.5
Sound Pressure level, Measure A-weighted per ISO7779 LpAm (dBA) Operation at 23°C (73°F)	40

Extended Operating Temperature Hardware Configuration Limits

Table 38 Cisco UCS C220 M6 Extended Operating Temperature Hardware Configuration Limits

Platform[1]	ASHRAE A3 (5ºC to 40ºC)[2]	ASHRAE A4 (5ºC to 45ºC)[3]
Processors:	155W+	155W+ and 105W+ (4 or 6 Cores)
Memory:	LRDIMMs	LRDIMMs
Storage:	M.2 SATA SSDs NVMe SSDs	M.2 SATA SSDs NVMe SSDs
Peripherals:	PCIe NVMe SSDs GPUs	MRAID PCIe NVMe SSDs GPUs mLOMs VICs NICs HBAs

Notes:

1. Two PSUs are required and PSU failure is not supported
2. Non-Cisco UCS qualified peripherals and/or peripherals that consume more than 25W are not supported
3. High power or maximum power fan control policy must be applied

Compliance Requirements

The regulatory compliance requirements for C-Series servers are listed in *Table 39*.

Table 39 UCS C-Series Regulatory Compliance Requirements

Parameter	Description
Regulatory Compliance	Products should comply with CE Markings per directives 2014/30/EU and 2014/35/EU
Safety	UL 60950-1 Second Edition CAN/CSA-C22.2 No. 60950-1 Second Edition EN 60950-1 Second Edition IEC 60950-1 Second Edition AS/NZS 60950-1 GB4943 2001
EMC - Emissions	47CFR Part 15 (CFR 47) Class A AS/NZS CISPR32 Class A CISPR32 Class A EN55032 Class A ICES003 Class A VCCI Class A EN61000-3-2 EN61000-3-3 KN32 Class A CNS13438 Class A
EMC - Immunity	EN55024 CISPR24 EN300386 KN35

Americas Headquarters
Cisco Systems, Inc.
San Jose, CA

Asia Pacific Headquarters
Cisco Systems (USA) Pte. Ltd.
Singapore

Europe Headquarters
Cisco Systems International BV Amsterdam,
The Netherlands

Cisco has more than 200 offices worldwide. Addresses, phone numbers, and fax numbers are listed on the Cisco Website at **www.cisco.com/go/offices.**

Cisco and the Cisco Logo are trademarks of Cisco Systems, Inc. and/or its affiliates in the U.S. and other countries. A listing of Cisco's trademarks can be found at www.cisco.com/go/trademarks. Third party trademarks mentioned are the property of their respective owners. The use of the word partner does not imply a partnership relationship between Cisco and any other company. (1005R)